

Nidec

All for dreams

Installation and Technical Guide

Digitax HD M75X Series

Variable Speed AC drive for Servo and Induction motors

Part Number: 0478-0395-06
Issue: 6

Original Instructions

For the purposes of compliance with the EU Machinery Directive 2006/42/EC, the English version of this manual is the Original Instructions. Manuals in other languages are Translations of the Original Instructions.

Documentation

Manuals are available to download from the following locations: **http://www.drive-setup.com/ctdownloads**

The information contained in this manual is believed to be correct at the time of printing and does not form part of any contract. The manufacturer reserves the right to change the specification of the product and its performance, and the contents of the manual, without notice.

Warranty and Liability

In no event and under no circumstances shall the manufacturer be liable for damages and failures due to misuse, abuse, improper installation, or abnormal conditions of temperature, dust, or corrosion, or failures due to operation outside the published ratings. The manufacturer is not liable for consequential and incidental damages. Contact the supplier of the drive for full details of the warranty terms.

Environmental policy

Control Techniques Ltd operates an Environmental Management System (EMS) that conforms to the International Standard ISO 14001.

Further information on our Environmental Policy can be found at: **http://www.drive-setup.com/environment**

Restriction of Hazardous Substances (RoHS)

The products covered by this manual comply with European and International regulations on the Restriction of Hazardous Substances including EU directive 2011/65/EU and the Chinese Administrative Measures for Restriction of Hazardous Substances in Electrical and Electronic Products.

Disposal and Recycling (WEEE)



When electronic products reach the end of their useful life, they must not be disposed of along with domestic waste but should be recycled by a specialist recycler of electronic equipment. Control Techniques products are designed to be easily dismantled into their major component parts for efficient recycling. The majority of materials used in the product are suitable for recycling.

Product packaging is of good quality and can be re-used. Large products are packed in wooden crates. Smaller products are packaged in strong cardboard cartons which have a high recycled fibre content. Cartons can be re-used and recycled. Polythene, used in protective film and bags for wrapping the product, can be recycled. When preparing to recycle or dispose of any product or packaging, please observe local legislation and best practice.

REACH legislation

EC Regulation 1907/2006 on the Registration, Evaluation, Authorisation and restriction of Chemicals (REACH) requires the supplier of an article to inform the recipient if it contains more than a specified proportion of any substance which is considered by the European Chemicals Agency (ECHA) to be a Substance of Very High Concern (SVHC) and is therefore listed by them as a candidate for compulsory authorisation.

Further information on our compliance with REACH can be found at: **http://www.drive-setup.com/reach**

Registered Office

Nidec Control Techniques Ltd

The Gro

Newtown

Powys

SY16 3BE

UK

Registered in England and Wales. Company Reg. No. 01236886.

Copyright

The contents of this publication are believed to be correct at the time of printing. In the interests of a commitment to a policy of continuous development and improvement, the manufacturer reserves the right to change the specification of the product or its performance, or the contents of the guide, without notice.

All rights reserved. No parts of this guide may be reproduced or transmitted in any form or by any means, electrical or mechanical including photocopying, recording or by an information storage or retrieval system, without permission in writing from the publisher.

Copyright © September 2019 Nidec Control Techniques Ltd

Contents

1 Safety information 6
1.1 Warnings, Cautions and Notes 6
1.2 Important safety information. Hazards. Competence of designers and installers 6
1.3 Responsibility 6
1.4 Compliance with regulations 6
1.5 Electrical hazards 6
1.6 Stored electrical charge 6
1.7 Mechanical hazards 6
1.8 Access to equipment 6
1.9 Environmental limits 6
1.10 Hazardous environments 6
1.11 Motor 7
1.12 Mechanical brake control 7
1.13 Adjusting parameters 7
1.14 Electromagnetic compatibility (EMC) 7

2 Product information 8
2.1 Introduction 8
2.2 Model number 9
2.3 Drive nameplate description 10
2.4 Ratings 10
2.5 Operating modes 11
2.6 Drive features 13
2.7 Capacitor module features 14
2.8 Items supplied with the drive 15
2.9 Items supplied with the capacitor module 15
2.10 Installation and system accessories 16

3 Mechanical installation 19
3.1 Safety information 19
3.2 Planning the installation 19
3.3 SI Option module installation 21
3.4 KI-Compact Display installation 22
3.5 KI-Compact 485 adaptor installation 24
3.6 Drive dimensions 25
3.7 Ingress protection label 29
3.8 Capacitor module dimensions 30
3.9 Horizontal mounting 31
3.10 Multi axis installations 32
3.11 Enclosure layout 35
3.12 Rear venting 36
3.13 Enclosure sizing 38
3.14 Enclosure design and drive ambient temperature .. 40
3.15 Drive cooling fan operation 40
3.16 Braking resistor 40
3.17 External EMC filter 44
3.18 Terminal size and torque settings 49
3.19 Hand tools required with Digitax HD M75X Series . 50
3.20 Routine maintenance 50
3.21 Fan replacement 51

4 Electrical installation 55
4.1 Power and ground connections 56
4.2 AC Supply requirements 59
4.3 Supplying the drive and capacitor module with DC . 60
4.4 External 24 Vdc supply 62
4.5 Low voltage operation 63
4.6 Ratings 63
4.7 Output circuit and motor protection 65
4.8 Braking 67
4.9 Ground leakage (PE current) 70
4.10 EMC (Electromagnetic compatibility) 70
4.11 Control terminals 85
4.12 Digitax HD M75C Capacitor Module status relay 86
4.13 Position feedback connections 86
4.14 Communication connections 94
4.15 Safe Torque Off (STO) 96

5 Multi axis system design 98
5.1 Multi axis system power profile and configuration ... 98
5.2 DC bus paralleling connection method 105
5.3 External 24 Vdc supply requirements for multi axis systems 109
5.4 Communications link 110
5.5 Brake operation for multi axis systems 110
5.6 EMC filters for multi axis systems 110
5.7 Multi axis system installation 111
5.8 Example design of a multi axis system 114

6 Technical data 117
6.1 Drive technical data 117

7 UL information 138

EU Declaration of Conformity

Nidec Control Techniques Ltd, The Gro, Newtown, Powys, SY16 3BE, UK.

This declaration is issued under the sole responsibility of the manufacturer. The object of the declaration is in conformity with the relevant European Union harmonization legislation. The declaration applies to the variable speed drive products shown below:

Model number	Interpretation	Nomenclature aaaa - bbc ddddde
aaaa	Basic series	M100, M101, M200, M201, M300, M400, M600, M700, M701, M702, M708, M709, M751, M753, F300, H300, E200, E300, HS30, HS70, HS71, HS72, M000, RECT
bb	Frame size	01, 02, 03, 04, 05, 06, 07, 08, 09, 10, 11
c	Voltage rating	1 = 100 V, 2 = 200 V, 4 = 400 V, 5 = 575 V, 6 = 690 V
ddddd	Current rating	Example 01000 = 100 A
e	Drive format	A = 6P Rectifier + Inverter (internal choke), D = Inverter, E = 6P Rectifier + Inverter (external choke), T = 12P Rectifier + Inverter (external choke)

The model number may be followed by additional characters that do not affect the ratings.

The variable speed drive products listed above have been designed and manufactured in accordance with the following European harmonized standards:

EN 61800-5-1:2007	Adjustable speed electrical power drive systems - Part 5-1: Safety requirements - Electrical, thermal and energy
EN 61800-3: 2004+A1:2012	Adjustable speed electrical power drive systems - Part 3: EMC requirements and specific test methods
EN 61000-6-2:2005	Electromagnetic compatibility (EMC) - Part 6-2: Generic standards - Immunity for industrial environments
EN 61000-6-4: 2007+ A1:2011	Electromagnetic compatibility (EMC) - Part 6-4: Generic standards - Emission standard for industrial environments
EN 61000-3-2:2014	Electromagnetic compatibility (EMC) - Part 3-2: Limits for harmonic current emissions (equipment input current ≤ 16 A per phase)
EN 61000-3-3:2013	Electromagnetic compatibility (EMC) - Part 3-3: Limitation of voltage changes, voltage fluctuations and flicker in public, low voltage supply systems, for equipment with rated current ≤ 16 A per phase and not subject to conditional connection

EN 61000-3-2:2014 Applicable where input current < 16 A. No limits apply for professional equipment where input power ≥ 1 kW.

These products comply with the Restriction of Hazardous Substances Directive (2011/65/EU), the Low Voltage Directive (2014/35/EU) and the Electromagnetic Compatibility Directive (2014/30/EU).



Jonathan Holman-White

Director, Technology

Date: 14th May 2018

Place: Newtown, Powys, UK

These electronic drive products are intended to be used with appropriate motors, controllers, electrical protection components and other equipment to form complete end products or systems. Compliance with safety and EMC regulations depends upon installing and configuring drives correctly, including using the specified input filters.

The drives must be installed only by professional installers who are familiar with requirements for safety and EMC. Refer to the Product Documentation. An EMC data sheet is available giving detailed information. The assembler is responsible for ensuring that the end product or system complies with all the relevant laws in the country where it is to be used.

EU Declaration of Conformity (including 2006 Machinery Directive)

Nidec Control Techniques Ltd,
The Gro
Newtown
Powys
UK
SY16 3BE

This declaration is issued under the sole responsibility of the manufacturer. The object of the declaration is in conformity with the relevant Union harmonization legislation. The declaration applies to the variable speed drive products shown below:

Model No.	Interpretation	Nomenclature aaaa - bbc ddddde
aaaa	Basic series	M600, M700, M701, M702, M708, M709, M751, M753, M754, F300, H300, E200, E300, HS70, HS71, HS72, M000, RECT
bb	Frame size	01, 02, 03, 04, 05, 06, 07, 08, 09, 10, 11
c	Voltage rating	1 = 100 V, 2 = 200 V, 4 = 400 V, 5 = 575 V, 6 = 690 V
ddddd	Current rating	Example 01000 = 100 A
e	Drive format	A = 6P Rectifier + Inverter (internal choke), D = Inverter, E = 6P Rectifier + Inverter (external choke), T = 12P Rectifier + Inverter (external choke)

The model number may be followed by additional characters that do not affect the ratings.

This declaration relates to these products when used as a safety component of a machine. Only the Safe Torque Off function may be used for a safety function of a machine. None of the other functions of the drive may be used to carry out a safety function.

These products fulfil all the relevant provisions of the Machinery Directive 2006/42/EC and the Electromagnetic Compatibility Directive (2014/30/EU).

EC type examination has been carried out by the following notified body:

TUV Rheinland Industrie Service GmbH
Am Grauen Stein
D-51105 Köln
Germany

Notified body identification number: 0035
The harmonized standards used are shown below:
EC type-examination certificate numbers:
01/205/5270.02/17 dated 2017-08-28

EN 61800-5-2:2016	Adjustable speed electrical power drive systems - Part 5-2: Safety requirements - Functional
EN 61800-5-1:2016 (in extracts)	Adjustable speed electrical power drive systems - Part 5-1: Safety requirements - Electrical, thermal and energy
EN 61800-3: 2004+A1:2012	Adjustable speed electrical power drive systems - Part 3: EMC requirements and specific test methods
EN ISO 13849-1:2015	Safety of Machinery, Safety-related parts of control systems, General principles for design
EN 62061:2005 + AC:2010 + A1:2013 + A2:2015	Safety of machinery, Functional safety of safety related electrical, electronic and programmable electronic control systems
IEC 61508 Parts 1 - 7:2010	Functional safety of electrical/ electronic/programmable electronic safety-related systems

Person authorised to complete the technical file:

P Knight

Conformity Engineer

Newtown, Powys, UK

DoC authorised by:



Jonathan Holman-White
Director, Technology
Date: 14th May 2018
Place: Newton, Powys, UK

IMPORTANT NOTICE

These electronic drive products are intended to be used with appropriate motors, controllers, electrical protection components and other equipment to form complete end products or systems. It is the responsibility of the installer to ensure that the design of the complete machine, including its safety-related control system, is carried out in accordance with the requirements of the Machinery Directive and any other relevant legislation. The use of a safety-related drive in itself does not ensure the safety of the machine. Compliance with safety and EMC regulations depends upon installing and configuring drives correctly, including using the specified input filters. The drive must be installed only by professional installers who are familiar with requirements for safety and EMC. The assembler is responsible for ensuring that the end product or system complies with all relevant laws in the country where it is to be used. For more information regarding Safe Torque Off, refer to the Product Documentation.

1 Safety information

1.1 Warnings, Cautions and Notes



A Warning contains information which is essential for avoiding a safety hazard.

WARNING



A Caution contains information which is necessary for avoiding a risk of damage to the product or other equipment.

CAUTION

NOTE

A Note contains information which helps to ensure correct operation of the product.

1.2 Important safety information. Hazards. Competence of designers and installers

This guide applies to products which control electric motors either directly (drives) or indirectly (controllers, option modules and other auxiliary equipment and accessories). In all cases the hazards associated with powerful electrical drives are present, and all safety information relating to drives and associated equipment must be observed.

Specific warnings are given at the relevant places in this guide.

Drives and controllers are intended as components for professional incorporation into complete systems. If installed incorrectly they may present a safety hazard. The drive uses high voltages and currents, carries a high level of stored electrical energy, and is used to control equipment which can cause injury. Close attention is required to the electrical installation and the system design to avoid hazards either in normal operation or in the event of equipment malfunction. System design, installation, commissioning/start-up and maintenance must be carried out by personnel who have the necessary training and competence. They must read this safety information and this guide carefully.

1.3 Responsibility

It is the responsibility of the installer to ensure that the equipment is installed correctly with regard to all instructions given in this guide. They must give due consideration to the safety of the complete system, so as to avoid the risk of injury both in normal operation and in the event of a fault or of reasonably foreseeable misuse.

The manufacturer accepts no liability for any consequences resulting from inappropriate, negligent or incorrect installation of the equipment.

1.4 Compliance with regulations

The installer is responsible for complying with all relevant regulations, such as national wiring regulations, accident prevention regulations and electromagnetic compatibility (EMC) regulations. Particular attention must be given to the cross-sectional areas of conductors, the selection of fuses or other protection, and protective ground (earth) connections.

This guide contains instructions for achieving compliance with specific EMC standards.

All machinery to be supplied within the European Union in which this product is used must comply with the following directives:

2006/42/EC Safety of machinery.

2014/30/EU: Electromagnetic Compatibility.

1.5 Electrical hazards

The voltages used in the drive can cause severe electrical shock and/or burns, and could be lethal. Extreme care is necessary at all times when working with or adjacent to the drive. Hazardous voltage may be present in any of the following locations:

- AC and DC supply cables and connections
- Output cables and connections
- Many internal parts of the drive, and external option units

Unless otherwise indicated, control terminals are single insulated and must not be touched.

The supply must be disconnected by an approved electrical isolation device before gaining access to the electrical connections.

The STOP and Safe Torque Off functions of the drive do not isolate dangerous voltages from the output of the drive or from any external option unit.

The drive must be installed in accordance with the instructions given in this guide. Failure to observe the instructions could result in a fire hazard.

1.6 Stored electrical charge

The drive contains capacitors that remain charged to a potentially lethal voltage after the AC supply has been disconnected. If the drive has been energized, the AC supply must be isolated at least ten minutes before work may continue.

1.7 Mechanical hazards

Careful consideration must be given to the functions of the drive or controller which might result in a hazard, either through their intended behaviour or through incorrect operation due to a fault. In any application where a malfunction of the drive or its control system could lead to or allow damage, loss or injury, a risk analysis must be carried out, and where necessary, further measures taken to reduce the risk - for example, an over-speed protection device in case of failure of the speed control, or a fail-safe mechanical brake in case of loss of motor braking.

With the sole exception of the Safe Torque Off function, none of the drive functions must be used to ensure safety of personnel, i.e. they must not be used for safety-related functions.

The Safe Torque Off function may be used in a safety-related application. The system designer is responsible for ensuring that the complete system is safe and designed correctly according to the relevant safety standards.

The design of safety-related control systems must only be done by personnel with the required training and experience. The Safe Torque Off function will only ensure the safety of a machine if it is correctly incorporated into a complete safety system. The system must be subject to a risk assessment to confirm that the residual risk of an unsafe event is at an acceptable level for the application.

1.8 Access to equipment

Access must be restricted to authorized personnel only. Safety regulations which apply at the place of use must be complied with.

1.9 Environmental limits

Instructions in this guide regarding transport, storage, installation and use of the equipment must be complied with, including the specified environmental limits. This includes temperature, humidity, contamination, shock and vibration. Drives must not be subjected to excessive physical force.

1.10 Hazardous environments

The equipment must not be installed in a hazardous environment (i.e. a potentially explosive environment).

1.11 Motor

The safety of the motor under variable speed conditions must be ensured.

To avoid the risk of physical injury, do not exceed the maximum specified speed of the motor.

Low speeds may cause the motor to overheat because the cooling fan becomes less effective, causing a fire hazard. The motor should be installed with a protection thermistor. If necessary, an electric forced vent fan should be used.

The values of the motor parameters set in the drive affect the protection of the motor. The default values in the drive must not be relied upon. It is essential that the correct value is entered in the Motor Rated Current parameter.

1.12 Mechanical brake control

Any brake control functions are provided to allow well co-ordinated operation of an external brake with the drive. While both hardware and software are designed to high standards of quality and robustness, they are not intended for use as safety functions, i.e. where a fault or failure would result in a risk of injury. In any application where the incorrect operation of the brake release mechanism could result in injury, independent protection devices of proven integrity must also be incorporated.

1.13 Adjusting parameters

Some parameters have a profound effect on the operation of the drive. They must not be altered without careful consideration of the impact on the controlled system. Measures must be taken to prevent unwanted changes due to error or tampering.

1.14 Electromagnetic compatibility (EMC)

Installation instructions for a range of EMC environments are provided in the *Digitax HD M75X Series Installation and Technical Guide*. If the installation is poorly designed or other equipment does not comply with suitable standards for EMC, the product might cause or suffer from disturbance due to electromagnetic interaction with other equipment. It is the responsibility of the installer to ensure that the equipment or system into which the product is incorporated complies with the relevant EMC legislation in the place of use.

2 Product information

The Digitax HD M75X series is a range of high performance servo drives used as a standalone single axis or easily configured for multi-axis systems. Functionality also allows for this range of drives to be reconfigured for high performance universal AC motor control.

2.1 Introduction

Servo and Universal AC drive

This product family consists of the following variants:

- Digitax HD M750 Ethernet
- Digitax HD M751 Base
- Digitax HD M753 EtherCAT

Common features (Digitax HD M750, M751 and M753)

- Universal high performance open and closed loop control for induction, servo, permanent magnet and linear motors using Unidrive M motor control algorithms.
- Onboard IEC 61131-3 programmable automation and motion control
- Flexibility with speed and position measurement, supporting multiple devices and all common interfaces
- SD Media Card slot for parameter copying and data storage.
- Dual channel Safe Torque Off (STO) input.
- Simplified wiring and networking for multi-axis arrangements.
- Connect support for quick start commissioning/start up (downloadable from http://www.drive-setup.com).
- Option module connectable.

Variant description summary (Digitax HD M750, M751 and M753)

Digitax HD M750 Ethernet

- Ethernet fieldbus communications.
- Integrated 2 port Ethernet switch.

Digitax HD M751 Base

- EIA-485 serial communications interface
- Option module support as standard for configuration and flexibility

Digitax HD M753 EtherCAT

- Onboard EtherCAT slave for centralized motion control and accurate synchronization applications.
- 2 integrated EtherCAT ports

Digitax HD Capacitor Module

The Digitax HD range includes a capacitor module which can be directly connected to the drive and used to improve single phase ratings, extend drive operation in mains loss conditions and improve DC bus regenerative energy absorption under motor deceleration.

2.2 Model number

2.2.1 Drive model number

The way in which the model numbers for the Digitax HD M75X series product range are formed is illustrated below:

Figure 2-1 Drive Model number

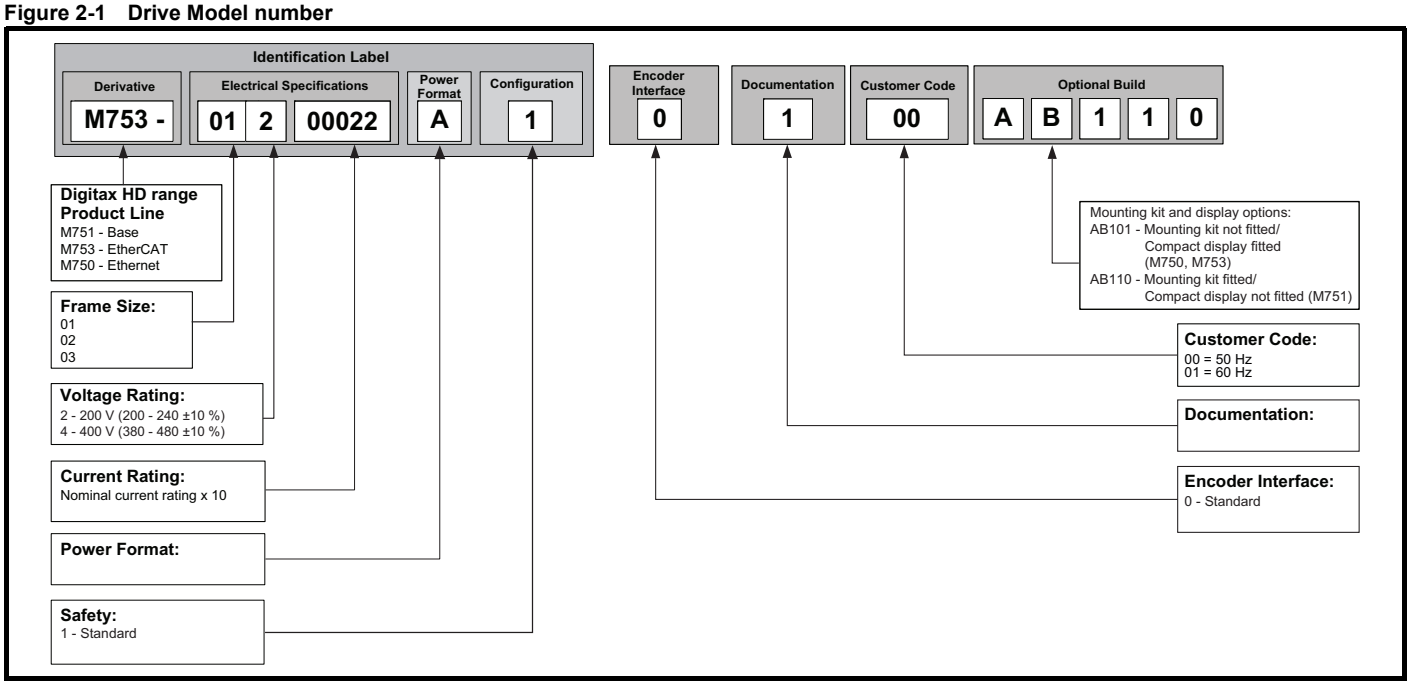

2.2.2 Capacitor module number

The way in which the model numbers for the Digitax HD capacitor modules are formed is illustrated below:

Figure 2-2 Capacitor module number

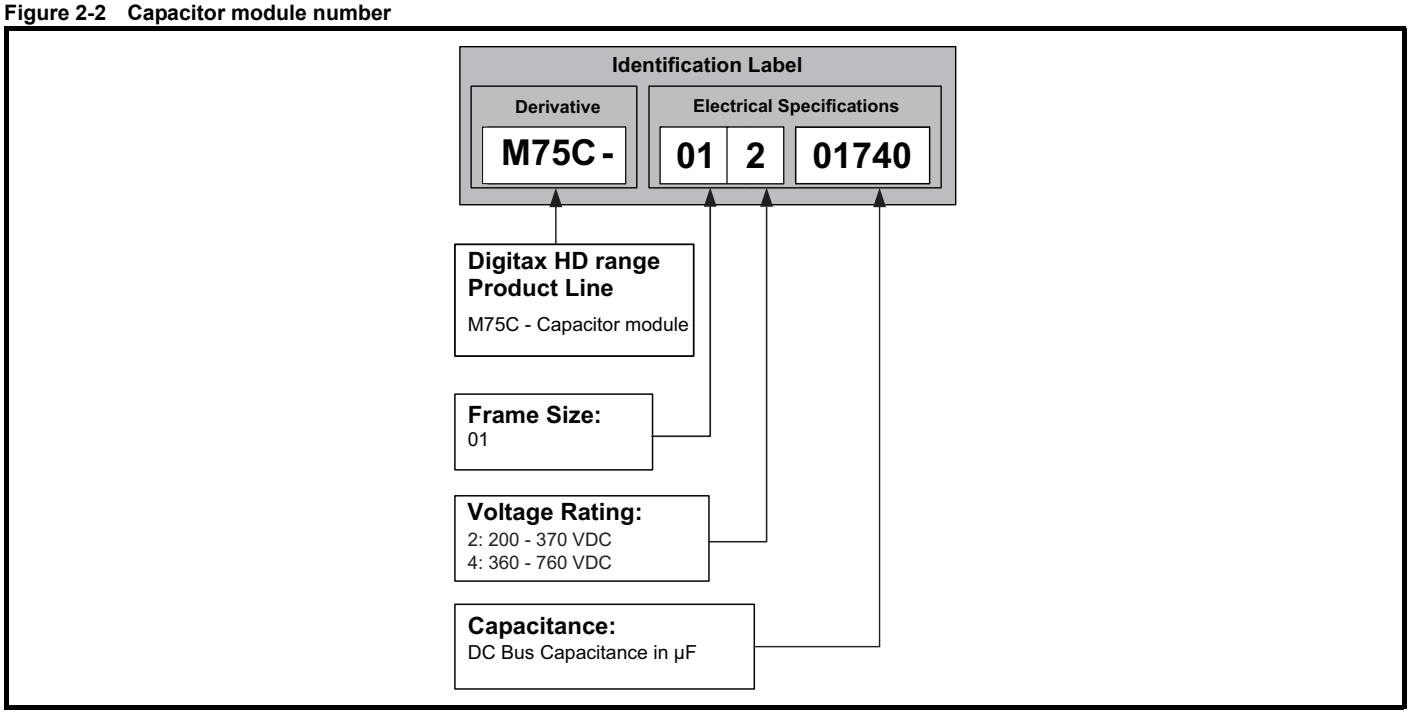

2.3 Drive nameplate description

The following labels are attached to the drive. See Figure 2-3 for location of rating labels.

Figure 2-3 Typical drive rating labels

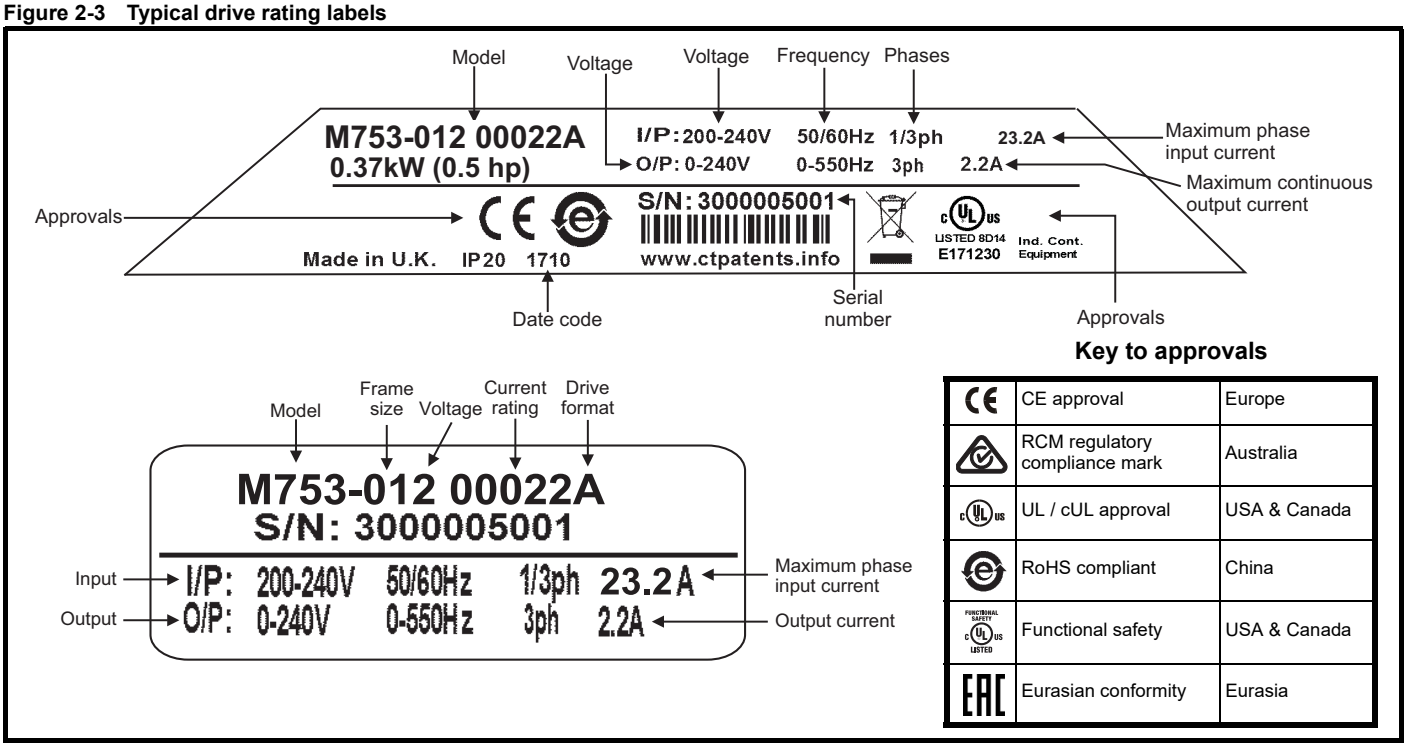

Key to approvals

CE	CE approval	Europe
	RCM regulatory compliance mark	Australia
cULus	UL / cUL approval	USA & Canada
	RoHS compliant	China
	Functional safety	USA & Canada
EAC	Eurasian conformity	Eurasia

NOTE

Date code format

The date code is four numbers. The first two numbers indicate the year and the remaining numbers indicate the week of the year in which the drive was built.

Example: A date code of 1710 would correspond to week 10 of year 2017.

2.4 Ratings

2.4.1 Maximum ratings

The drive ratings given below are for maximum 40 °C (104 °F), 1000 m altitude and 8 kHz switching frequency. Derating is required for higher switching frequencies, ambient temperature > 40 °C (104 °F) and higher altitude. For further information, refer to Chapter 6 *Technical data* on page 117.

Table 2-1 Maximum RFC-S mode ratings

Model	No. of input phases	Nominal current	Peak current	Typical continuous output power
		A	A	kW
01200022	1	1.1	6.6	0.3
01200040	1	2.2	12.0	0.7
01200065	1	3.5	19.5	1.1
02200090	1	5.6	27.0	1.8
02200120	1	7.5	36.0	2.3
03200160	1	10.8	48.0	3.4
01200022	3	2.2	6.6	0.7
01200040	3	4.0	12.0	1.3
01200065	3	6.5	19.5	2.0
02200090	3	9.0	27.0	2.7
02200120	3	12.0	36.0	3.7
03200160	3	16.0	48.0	5.0
01400015	3	1.5	4.5	0.8
01400030	3	3.0	9.0	1.6
01400042	3	4.2	12.6	1.9
02400060	3	6.0	18.0	3.1

02400080	3	8.0	24.0	4.2
02400105	3	10.5	31.5	5.6
03400135	3	13.5	40.5	6.9
03400160	3	16.0	48.0	7.6

NOTE

In continuous applications, the maximum allowed power may override the maximum allowable current.

2.4.2 Nominal current ratings with single phase input

200 V single phase drives have a reduced nominal current rating to limit the effect of DC bus voltage ripple. DC bus voltage ripple can be significantly reduced by adding additional DC bus capacitance. The additional DC bus capacitance required to achieve three phase nominal current ratings from a 200 V drive operating on a single phase supply is detailed in Table 2-2 *Additional DC bus capacitance required for three phase nominal current ratings with single phase input*.

Table 2-2 Additional DC bus capacitance required for three phase nominal current ratings with single phase input

Model	No. of input phases	Additional DC bus capacitance value	Digitax HD capacitor module
		uF	uF
Frame 1	1	290	1740 (1 module)
Frame 2	1	360	
Frame 3	1	170	

2.5 Operating modes

The drive is designed to operate in any of the following modes:

1. RFC - S
   - With position feedback sensor
   - Without position feedback sensor (Sensorless)
2. Open loop mode
   - Open loop vector mode
   - Fixed V/F mode (V/Hz)
   - Quadratic V/F mode (V/Hz)
3. RFC - A
   - With position feedback sensor
   - Without position feedback sensor (Sensorless)

As a range of high performance servo drives, the Digitax HD M75X series are initially factory configured for RFC-S mode. The operating mode will need to be re-configured for AC induction motor control (open loop or RFC-A mode).

2.5.1 RFC- S

Rotor **F**lux **C**ontrol for Synchronous (permanent magnet brushless) motors (**RFC-S**) provides closed loop control with position feedback device.

With position feedback

For use with permanent magnet brushless motors with a feedback device installed.

The drive directly controls the speed of the motor using the feedback device to ensure the rotor speed is exactly as demanded.

Absolute position information is required from the feedback device to ensure the output voltage is accurately matched to the back EMF of the motor. Full torque is available across the entire speed range.

Without position feedback (Sensorless)

For permanent magnet brushless motor control without a feedback device, using current, voltages and key motor parameters for motor control.

2.5.2 Open loop mode

The drive applies power to the motor at frequencies varied by the user. The motor speed is a result of the output frequency of the drive and slip due to the mechanical load. The drive can improve the speed control of the motor by applying slip compensation. The performance at low speed depends on whether V/F mode or open loop vector mode is selected.

Open loop vector mode

The voltage applied to the motor is directly proportional to the frequency except at low speed where the drive uses motor parameters to apply the correct voltage to keep the flux constant under varying load conditions.

Typically 100 % torque is available down to 1 Hz for a 50 Hz motor.

Fixed V/F mode

The voltage applied to the motor is directly proportional to the frequency except at low speed where a voltage boost is provided which is set by the user. This mode can be used for multi-motor applications.

Typically 100 % torque is available down to 4 Hz for a 50 Hz motor.

Quadratic V/F mode

The voltage applied to the motor is directly proportional to the square of the frequency except at low speed where a voltage boost is provided which is set by the user. This mode can be used for running fan or pump applications with quadratic load characteristics or for multi-motor applications. This mode is not suitable for applications requiring a high starting torque.

2.5.3 RFC-A mode

Rotor **F**lux **C**ontrol for Asynchronous (induction) motors (**RFC-A**) encompasses closed loop vector control with a position feedback device.

With position feedback

For use with induction motors with a feedback device installed. The drive directly controls the speed of the motor using the feedback device to ensure the rotor speed exactly as demanded. Motor flux is accurately controlled at all times to provide full torque all the way down to zero speed.

Without position feedback (Sensorless)

Sensorless mode provides closed loop control without the need for position feedback by using current, voltages and key motor parameters to estimate the motor speed. It can eliminate instability traditionally associated with open loop control such as operating large motors with light loads at low frequencies.

2.6 Drive features

Figure 2-4 Features of the drive (Frame 1 illustrated)

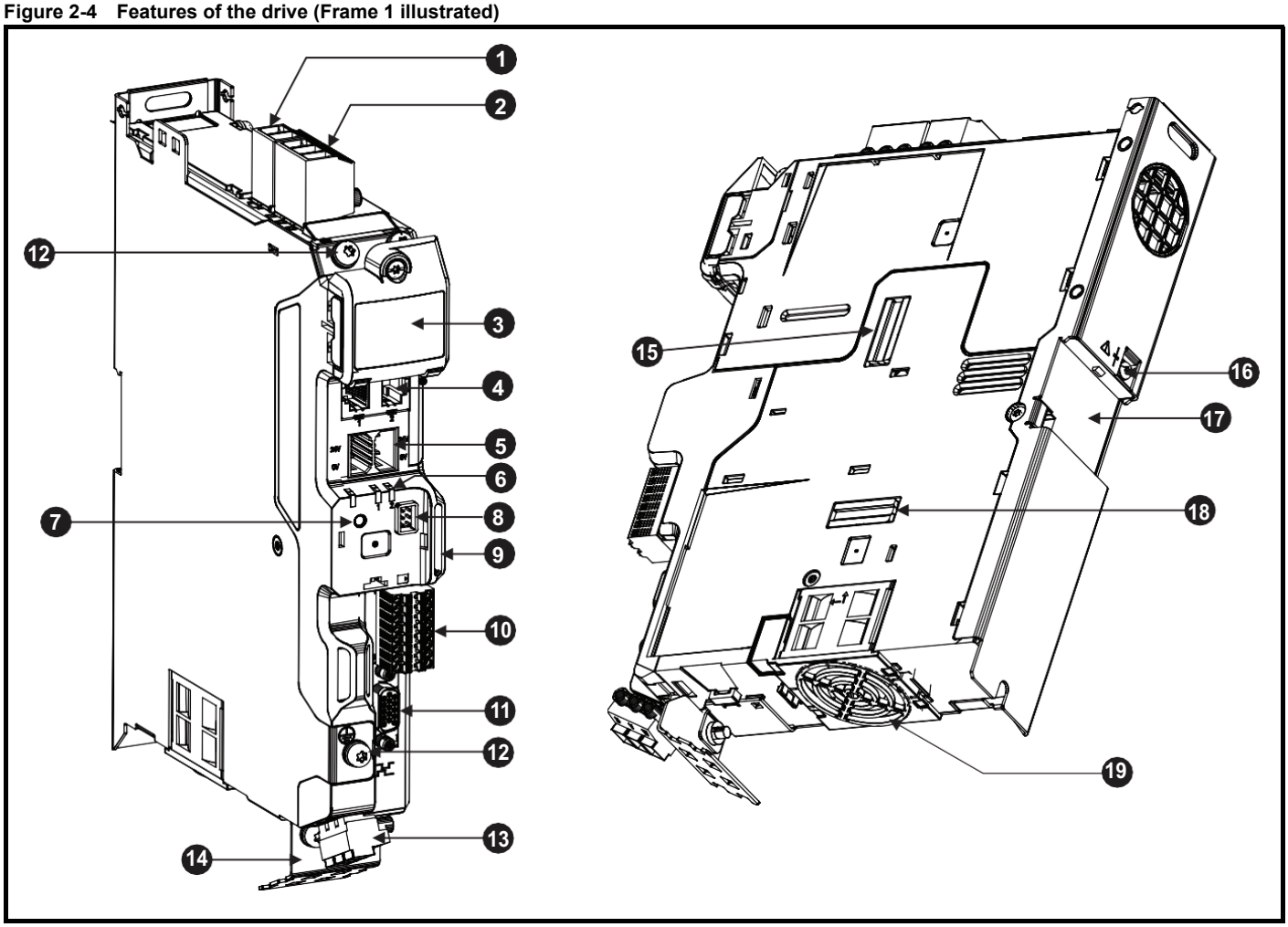

Table 2-3 Key to features of the drive

Number	Description
1	Braking terminals
2	AC supply terminals
3	DC bus terminal cover
4	Communication port connections
5	External 24 V supply terminals
6	Status and communication LEDS
7	Reset
8	Display connection
9	SD card slot
10	Control and holding brake terminals
11	Position feedback connection
12	Ground screw
13	Motor terminals
14	Cable screen bracket
15	Option module slot 1 cover*
16	Internal EMC filter screw (frame 1 and 2)
17	DIN rail alignment
18	Option module slot 2 cover*
19	Cooling fan

* Additional mounting frame required when connecting option modules where not already installed.

2.7 Capacitor module features

Figure 2-5 Features of the capacitor module

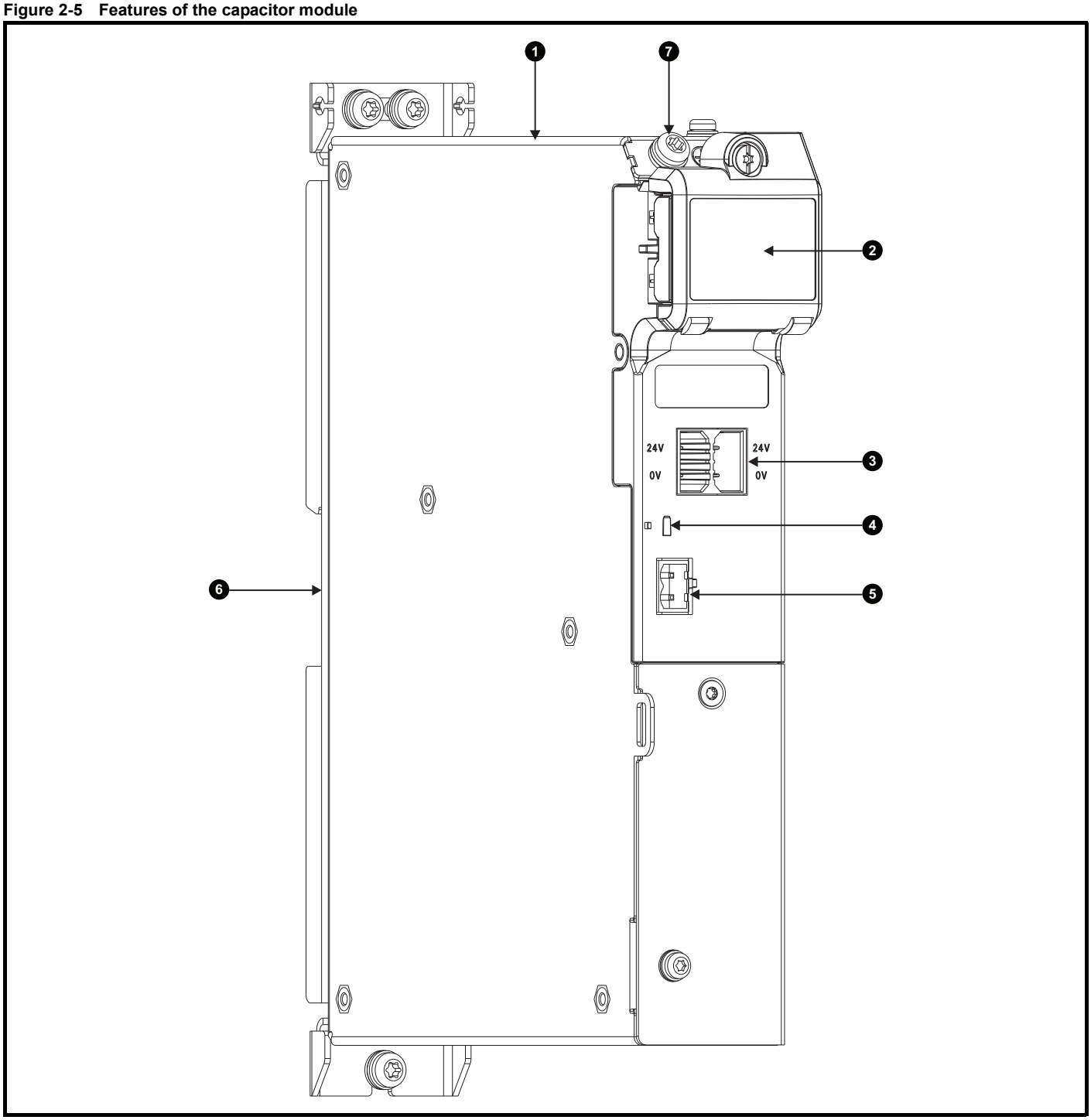

Table 2-4 Key to features of the capacitor module

Number	Description
1	Top vent for natural convection cooling
2	DC bus terminal cover
3	External 24 V supply terminals
4	Status LED*
5	Status relay
6	DIN rail alignment
7	Ground screw

* Status LED will remain constantly illuminated under a healthy condition and flash under a fault condition.

2.8 Items supplied with the drive

The drive is supplied with a copy of the Quick Start Guide, a safety information booklet, the Certificate of Quality and supplied accessories including the items shown in Table 2-3.

Table 2-5 Parts supplied with the drive

Description	Frame size 1 and 2	Frame size 3	Quantity
Power Input Connector			1
Brake Connector	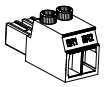		1
I/O Connector	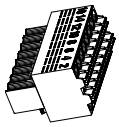		1
24 V Supply Input Connector	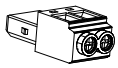		1
Cable Screen Bracket	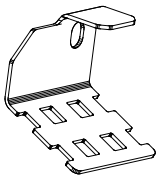		1
Cable Screen Bracket		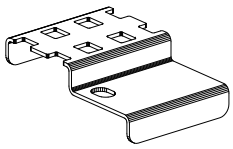	1
M4 x 8 Screws (Motor earth, Input earth and cable screen bracket)			3
Motor Connector	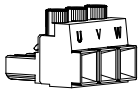		1

The parts listed above are supplied with each drive in a kit and are available to purchase separately.

Frame size	Kit part number
1 & 2	9500-1044
3	9500-1045

2.9 Items supplied with the capacitor module

Table 2-6 Parts supplied with the capacitor module

Description	Capacitor module
Status relay connector	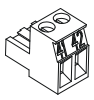
24 V Supply input connector	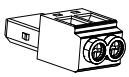
M4 x 8 screws	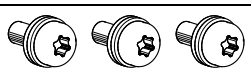

The part number for the kit bag is 9500-1064.

NOTE

Grommet kit, part number 3470-0145, must be ordered separately when connecting M75C with non-Digitax HD products.

2.10 Installation and system accessories

2.10.1 Installation and system accessory kits available with Digitax HD M75X series

Table 2-7 Options available with drive

Option	Part number	Description
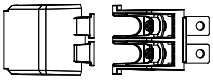	9500-1050	External DC cable connection kit for drive and capacitor module
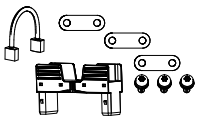	9500-1047	Multi axis kit (standard - without SI-Option Mounting kit fitted) for drive and capacitor module. Includes DC busbar, ground screws, 24 V link and communications link.
	9500-1048	Multi axis kit (with SI-Option Mounting kit fitted), for drive and capacitor module. Includes DC busbar, ground screws, 24 V link and communications link.
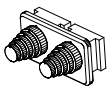	3470-0145	Cable grommet kit for drive and capacitor module
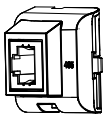	82700000020300	KI-Compact 485 adaptor
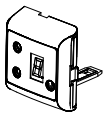	82700000020400	KI-Compact display
	See section 3.17 *External EMC filter* on page 44	External EMC filter
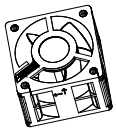	9500-1053	Fan replacement kit (frame 1 and 2)
	9500-1054	Fan replacement kit (frame 3)
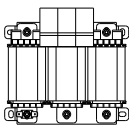	4401-0236	Input inductor
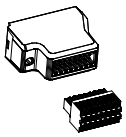	82700000020200	Encoder breakout kit
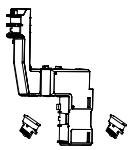	9500-1055	SI-Option Mounting kit
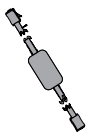	4500-0096	USB / EAI485 Communications Converter Cable
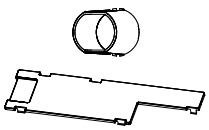	3470-0158	Frame 1 Rear vent kit

Option	Part number	Description
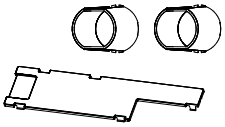	3470-0181	Frame 2/3 Rear vent kit
	82400000019600	Remote Keypad RTC
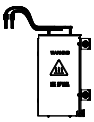	9500-1049	Compact brake resistor kit, 70 Ω 50 W (Drive mountable)
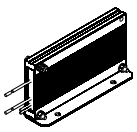	1220-2201	External brake resistor - DBR 100 W, 20 Ω
	1220-2401	External brake resistor - DBR 100 W, 40 Ω
	1220-2801	External brake resistor - DBR 100 W, 80 Ω
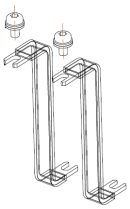	3470-0146 3470-0147 3470-0148 3470-0149	Digitax HD to Unidrive M Frame 3 to 5 (panel mounted) DC bus paralleling kit Digitax HD to Unidrive M Frame 3 to 5 (through hole mounted) DC bus paralleling kit Digitax HD to Unidrive M Frame 6 (panel mounted) DC bus paralleling kit Digitax HD to Unidrive M Frame 6 (through hole mounted) DC bus paralleling kit

2.10.2 Compatible option modules

All standard option modules are color-coded in order to make identification easy. All modules have an identification label on top of the module. Standard option modules can be installed to any of the available option slots on the drive. The following tables shows the color-code key and gives further details on their function.

Table 2-8 Option module identification

Type	Option module*	Color	Name	Further Details
Fieldbus		Purple	SI-PROFIBUS	**PROFIBUS option** PROFIBUS adapter for communications with the drive
		Medium Grey	SI-DeviceNet	**DeviceNet option** DeviceNet adapter for communications with the drive
		Light Grey	SI-CANopen	**CANopen option** CANopen adapter for communications with the drive
		Beige	SI-Ethernet	External Ethernet module that supports EtherNet/IP, Modbus TCP/IP and RTMoE. The module can be used to provide high speed drive access, global connectivity and integration with IT network technologies, such as wireless networking
		Yellow Green	SI-PROFINET V2	**PROFINET V2 option** PROFINET V2 adapter for communications with the drive Note: PROFINET V2 replaces PROFINET RT.
		Brown Red	SI-EtherCAT	**EtherCAT option** EtherCAT adapter for communications with the drive

Type	Option module*	Color	Name	Further Details
Automation (I/O expansion)		Orange	SI-I/O	**Extended I/O** Increases the I/O capability by adding the following combinations: • Digital I/O • Digital Inputs • Analog Inputs (differential or single ended) • Analog Output • Relays
Feedback		Light Brown	SI-Encoder	Incremental encoder input interface module.
		Dark Brown	SI-Universal Encoder	Additional combined encoder input and output interface supporting Incremental, SinCos, HIPERFACE, EnDAT and SSI encoders.
Automation (Applications)		Moss Green	MCi200	**Machine Control Studio Compatible Applications Processor** 2nd processor for running pre-defined and/or customer created application software.
		Moss Green	MCi210	**Machine Control Studio Compatible Applications Processor (with Ethernet communications)** 2nd processor for running pre-defined and/or customer created application software with Ethernet communications.
		Black	SI-Applications Compact	**SyPTPro Compatible Applications Processor (with CTNet)** 2nd processor for running pre-defined and/or customer created application software with CTNet support.

* Additional SI option mounting kit required when connecting option modules where not already fitted.

3 Mechanical installation

3.1 Safety information

Follow the instructions

The mechanical and electrical installation instructions must be adhered to. Any questions or doubt should be referred to the supplier of the equipment. It is the responsibility of the owner or user to ensure that the installation of the drive and any external option unit, and the way in which they are operated and maintained, comply with the requirements of the Health and Safety at Work Act in the United Kingdom or applicable legislation and regulations and codes of practice in the country in which the equipment is used.

WARNING

Stored charges

The drive contains capacitors that remain charged to a potentially lethal voltage after the AC supply has been disconnected. If the drive has been energized, the AC supply must be isolated at least ten minutes before work may continue.

Normally, the capacitors are discharged by an internal resistor. Under certain, unusual fault conditions, it is possible that the capacitors may fail to discharge, or be prevented from being discharged by a voltage applied to the output terminals. If the drive has failed in a manner that causes the display to go blank immediately, it is possible the capacitors will not be discharged. In this case, consult Nidec Industrial Automation or their authorized distributor.

WARNING

Competence of the installer

The drive must be installed by professional assemblers who are familiar with the requirements for safety and EMC. The assembler is responsible for ensuring that the end product or system complies with all the relevant laws in the country where it is to be used.

WARNING

Enclosure

The drive is intended to be mounted in an enclosure which prevents access except by trained and authorized personnel, and which prevents the ingress of contamination. It is designed for use in an environment classified as pollution degree 2 in accordance with IEC 60664-1. This means that only dry, non-conducting contamination is acceptable.

WARNING

3.2 Planning the installation

The following considerations must be made when planning the installation:

3.2.1 Access

Access must be restricted to authorized personnel only. Safety regulations which apply at the place of use must be complied with.

3.2.2 Environmental protection

The drive must be protected from:

- Moisture, including dripping water or spraying water and condensation. An anti-condensation heater may be required, which must be switched off when the drive is running.
- Contamination with electrically conductive material
- Contamination with any form of dust which may restrict the fan, or impair airflow over various components
- Temperature beyond the specified operating and storage ranges
- Corrosive gasses

NOTE

The product is supplied with a vent cover to prevent debris (e.g. wire off-cuts) from entering the drive. The vent cover must be removed before first power up.

3.2.3 Cooling

The heat produced by the drive must be removed without its specified operating temperature being exceeded. Refer to section 3.13 *Enclosure sizing* on page 38.

3.2.4 Electrical safety

The installation must be safe under normal and fault conditions. Electrical installation instructions are given in Chapter 4 *Electrical installation* on page 55.

3.2.5 Fire protection

The drive enclosure is not classified as a fire enclosure. A separate fire enclosure must be provided. For installation in the USA, a NEMA 12 enclosure is suitable.

For installation outside the USA, the following (based on IEC 62109-1, standard for PV inverters) is recommended.

Enclosure can be metal and/or polymeric, polymer must meet requirements which can be summarized for larger enclosures as using materials meeting at least UL 94 class 5VB at the point of minimum thickness.

Air filter assemblies to be at least class V-2.

The location and size of the bottom shall cover the area shown in Figure 3-1. Any part of the side which is within the area traced out by the 5° angle is also considered to be part of the bottom of the fire enclosure.

Figure 3-1 Fire enclosure bottom layout

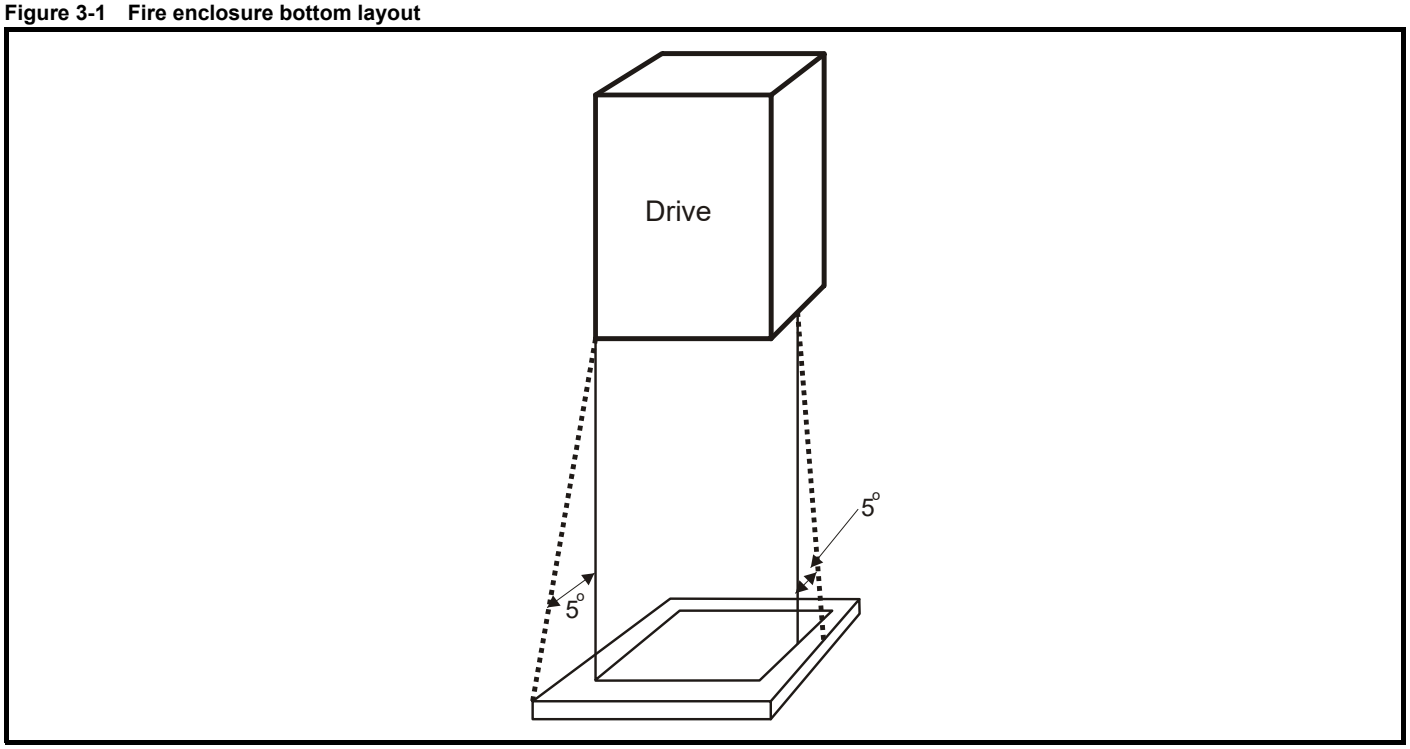

The bottom, including the part of the side considered to be part of the bottom, must be designed to prevent escape of burning material - either by having no openings or by having a baffle construction. This means that openings for cables etc. must be sealed with materials meeting the 5VB requirement, or else have a baffle above. See Figure 3-2 for acceptable baffle construction. This does not apply for mounting in an enclosed electrical operating area (restricted access) with concrete floor.

Figure 3-2 Fire enclosure baffle construction

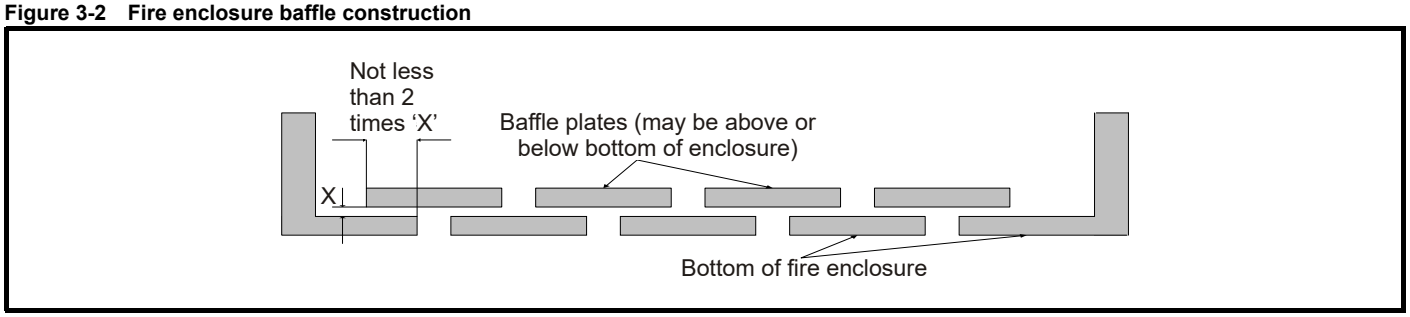

3.2.6 Electromagnetic compatibility

Variable speed drives are powerful electronic circuits which can cause electromagnetic interference if not installed correctly with careful attention to the layout of the wiring.

Some simple routine precautions can prevent disturbance to typical industrial control equipment.

If it is necessary to meet strict emission limits, or if it is known that electromagnetically sensitive equipment is located nearby, then full precautions must be observed. The drive has an internal EMC filter, which reduces emissions under certain conditions. If these conditions are exceeded, then the use of an external EMC filter may be required at the drive inputs, which must be located close to the drives. Space must be made available for the filters and allowance made for carefully segregated wiring. Both levels of precautions are covered in section 4.10 *EMC (Electromagnetic compatibility)* on page 70.

3.2.7 Hazardous areas

The drive must not be located in a classified hazardous area unless it is installed in an approved enclosure and the installation is certified.

3.3 SI Option module installation

CAUTION

Remove the AC/DC power as well as the 24 Vdc supply to the drive before installing / removing the option module. Failure to do so may result in damage to the product.

CAUTION

Care must be taken when handling the option module interface card to avoid contaminating the gold contacts. Gold contacts must not be touched directly, handle the interface card using the protective cover provided in the mounting kit.

When connecting SI option modules, an additional SI option mounting kit is required, if the drive is not supplied with a SI option mounting kit fitted. The SI option mounting kit can be ordered from the supplier of the drive. Refer to section 2.10 *Installation and system accessories* on page 16 for more information.

For fitting instructions, refer to Figure 3-3.

Figure 3-3 SI-Option mounting kit Installation

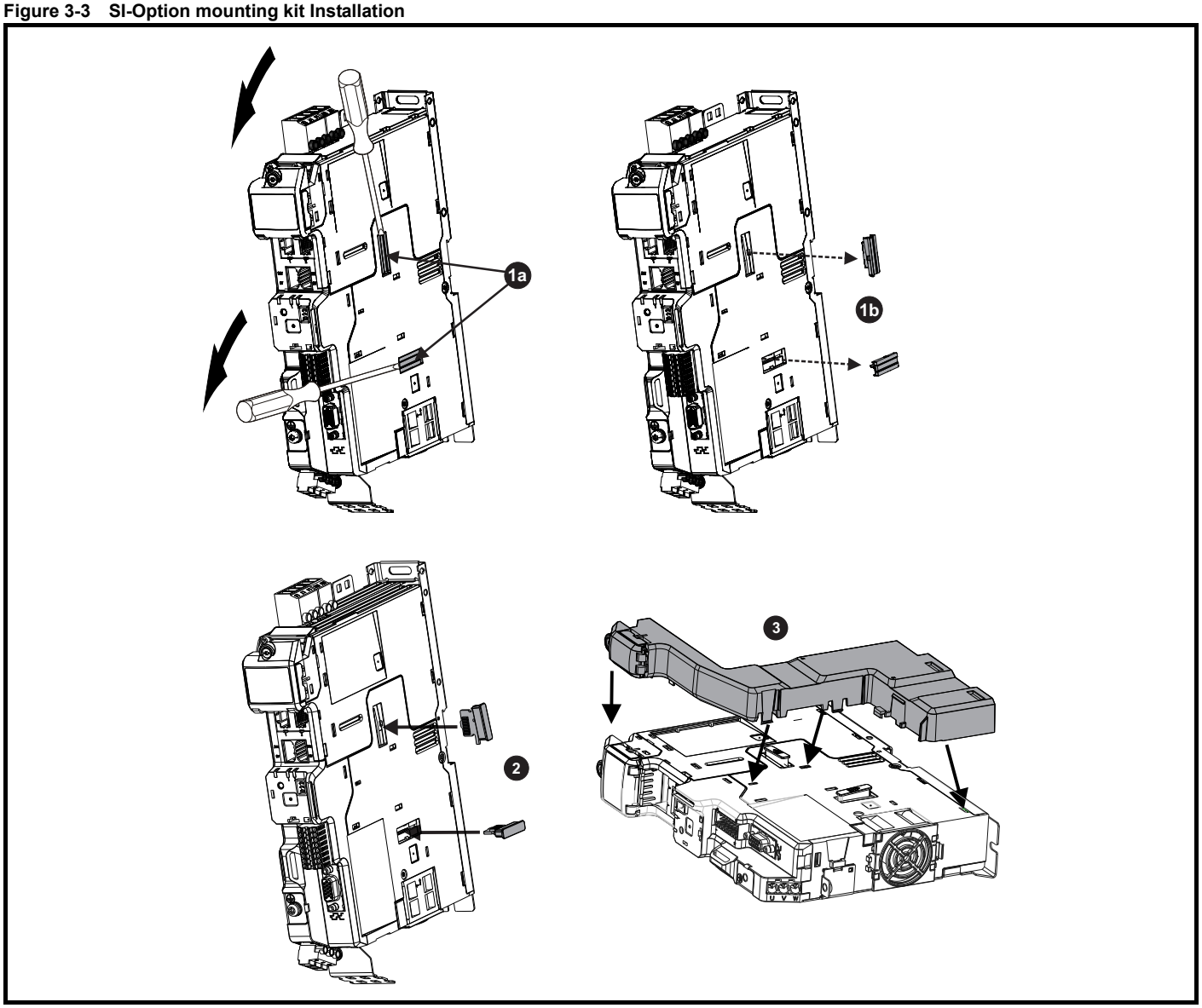

1a. Insert a flat head terminal screwdriver underneath the option module slot covers and prise both out in the direction shown as highlighted (**1b**). If only one option module slot is required, only remove one option module slot cover.

2. Install the interface card(s) into the option module slot(s) (do not remove the protective cover). The interface card will remain at an angle with respect to the plastic.

3. Line up and clip the SI-option module support mounting frame to the drive in the direction shown.

Figure 3-4 SI-Option module installation

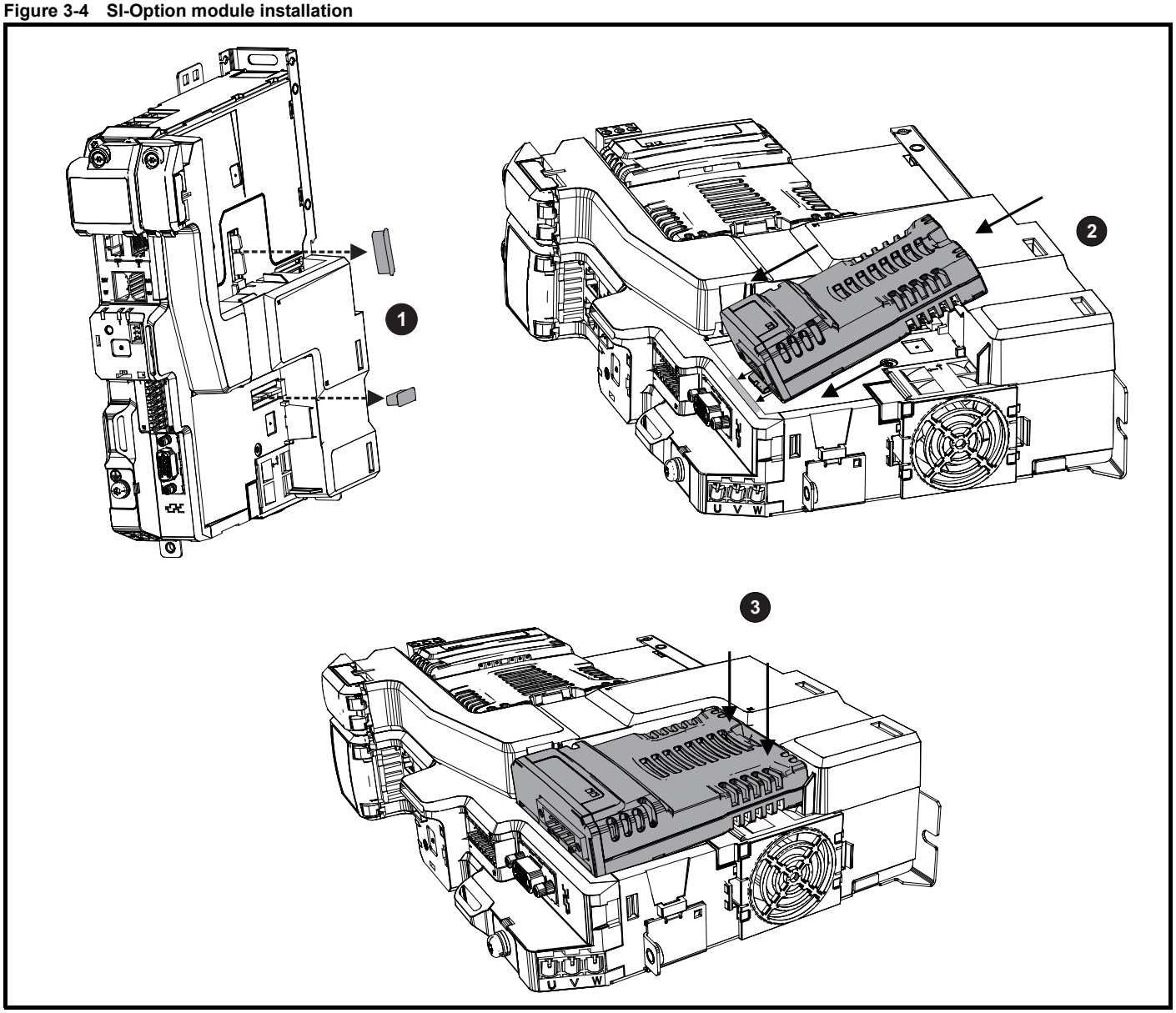

1. Remove the protective interface card cover. If only one option module slot is required, only remove one protective interface card cover.
2. Align and insert the option module tab into the slot on the drive plastic.
3. Once the option module tab is located into the slot on the drive, push down at the rear of the option module until it clicks into place.

NOTE

Once fitted, the SI-option module remains at an angle with respect to the drive.

3.4 KI-Compact Display installation

The Digitax HD M75X display provides the following features:

- Displays drive status information.
- Allows the drive node address to be set via dials on the front of the display.
- A push button to reset drive trips.

NOTE

The KI-Compact Display can be installed/removed while the drive is powered. A delay of 10 seconds should be maintained following power up or following a node address dial adjustment before the KI-Compact Display can be removed from the drive, to ensure correct transfer of node address data.

If not already fitted, the display can be ordered from the supplier of the drive. Refer to section 2.10 *Installation and system accessories* on page 16.

Figure 3-5 Installing the display

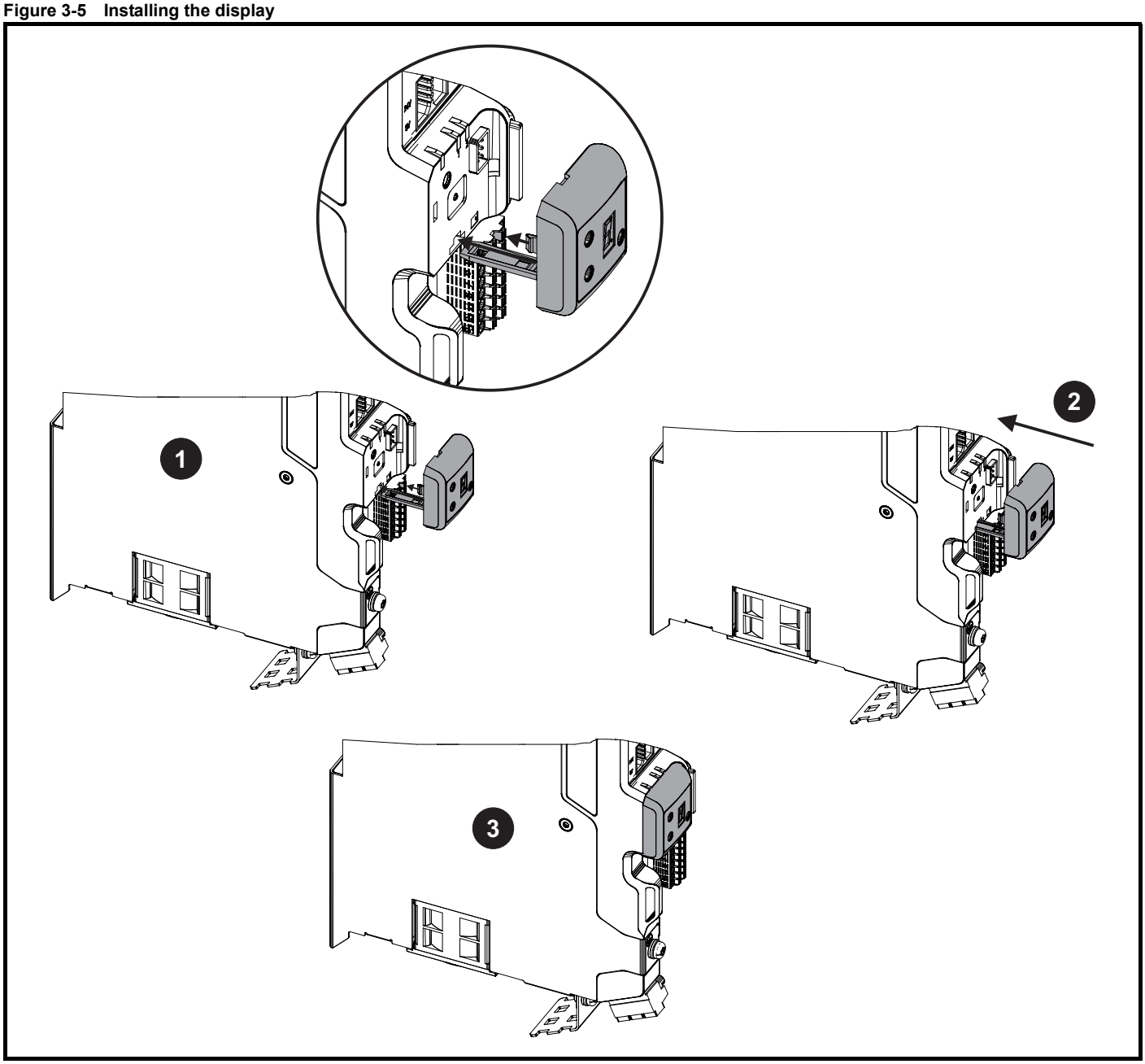

1. Align display tether with slot (the tether keeps the display associated to the drive).
2. Slide the display and tether in the direction shown.
3. Push display until it clicks into position.

3.4.1 Drive state representation

Figure 3-6 KI-Compact display

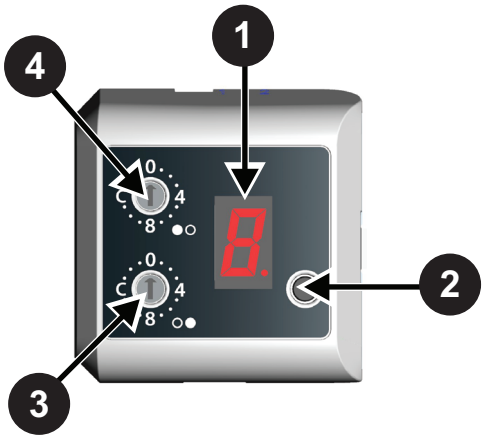

1. Single Character display.
2. Reset switch.
3. Rotary dial for node address setting (least significant).
4. Rotary dial for node address setting (Most significant).

Refer to the relevant Digitax HD M75X Control User Guide for more information.

3.5 KI-Compact 485 adaptor installation

The Digitax HD M75X KI-Compact 485 adaptor provides an EIA-485 port for permanent connection to a Remote Keypad RTC or the temporary attachment for PC tool connection. The KI-Compact 485 adaptor is available from the supplier of the drive. Refer to section 2.10 *Installation and system accessories* on page 16.

Figure 3-7 Installing the KI-Compact 485 adaptor without display fitted

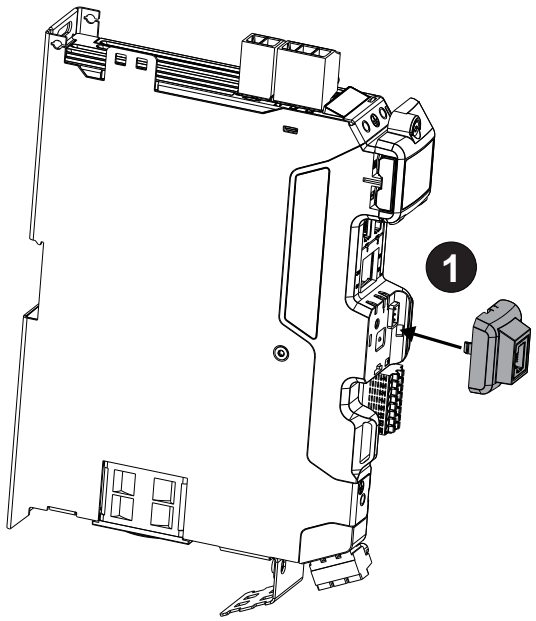

1. Align the KI-Compact 485 adaptor to the display housing and push on until it clicks into place.

Figure 3-8 Installing the KI-Compact 485 adaptor with KI-Compact Display fitted

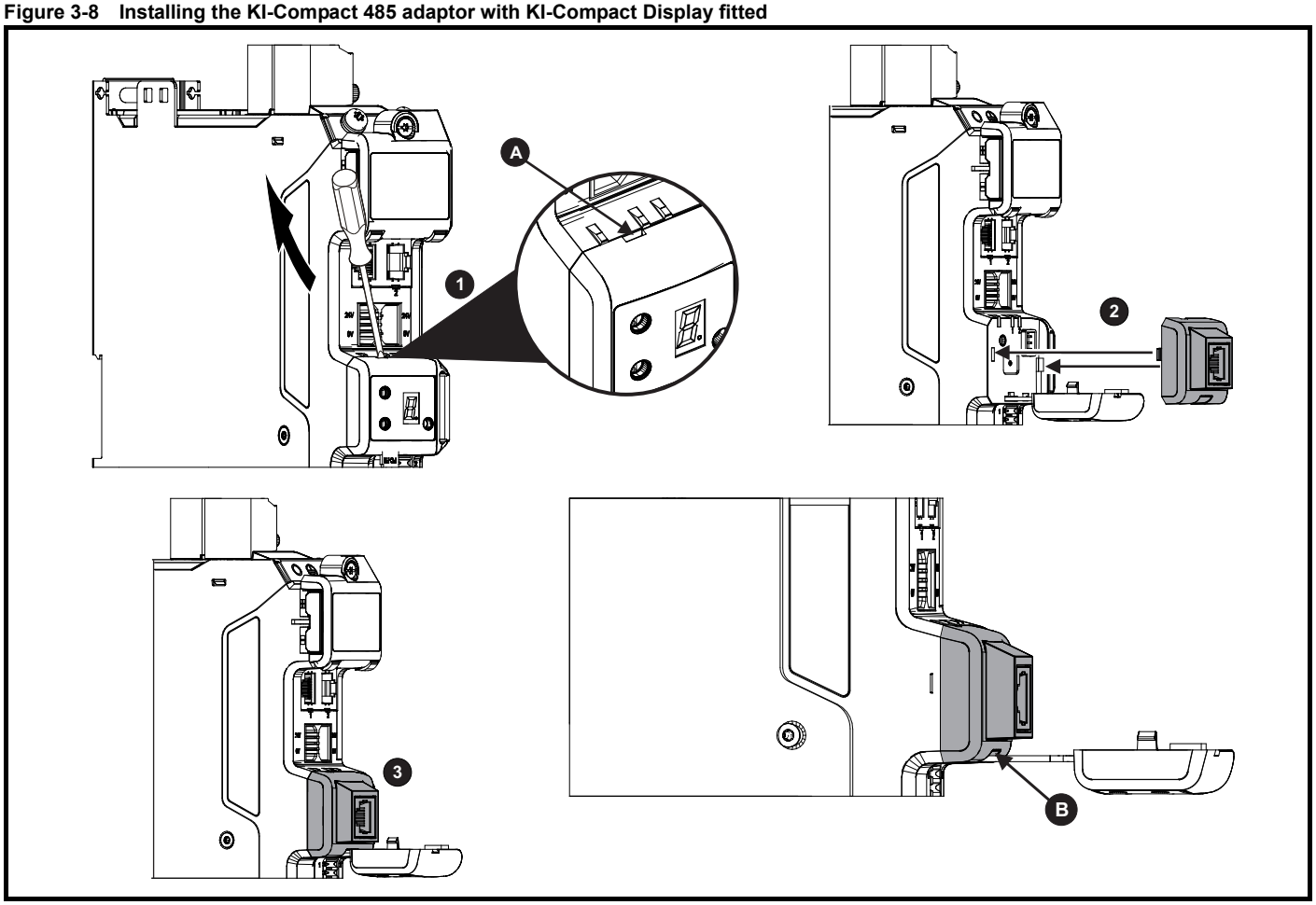

1. Unclip and pull the display away from the front cover. The tether keeps the display associated to the drive and should not be removed. A small terminal screwdriver maybe required to unclip the display. A slot in the drive plastic is provided for this purpose (A).

2. Align the Remote Keypad Adaptor with the display housing noting the position of the notch (See view B above). Install the Remote Keypad Adaptor over the display tether.

3. Push the Remote Keypad Adaptor into the housing until it clicks into place.

3.6 Drive dimensions

WARNING

Enclosure
The drive is intended to be mounted in an enclosure which prevents access except by trained and authorized personnel, and which prevents the ingress of contamination. It is designed for use in an environment classified as pollution degree 2 in accordance with IEC 60664-1. This means that only dry, non-conducting contamination is acceptable.

The drive complies with the requirements of IP20.

NOTE

The product is designed to fit within a 200 mm (7.87 in) deep cabinet, this may require the use of an angled feedback connector.

NOTE

Allow 50 mm at the top and 100mm at the base of the drive for cable connectors and cable bend radii.

3.6.1 Drive dimensions

Figure 3-9 Frame 1 dimensions

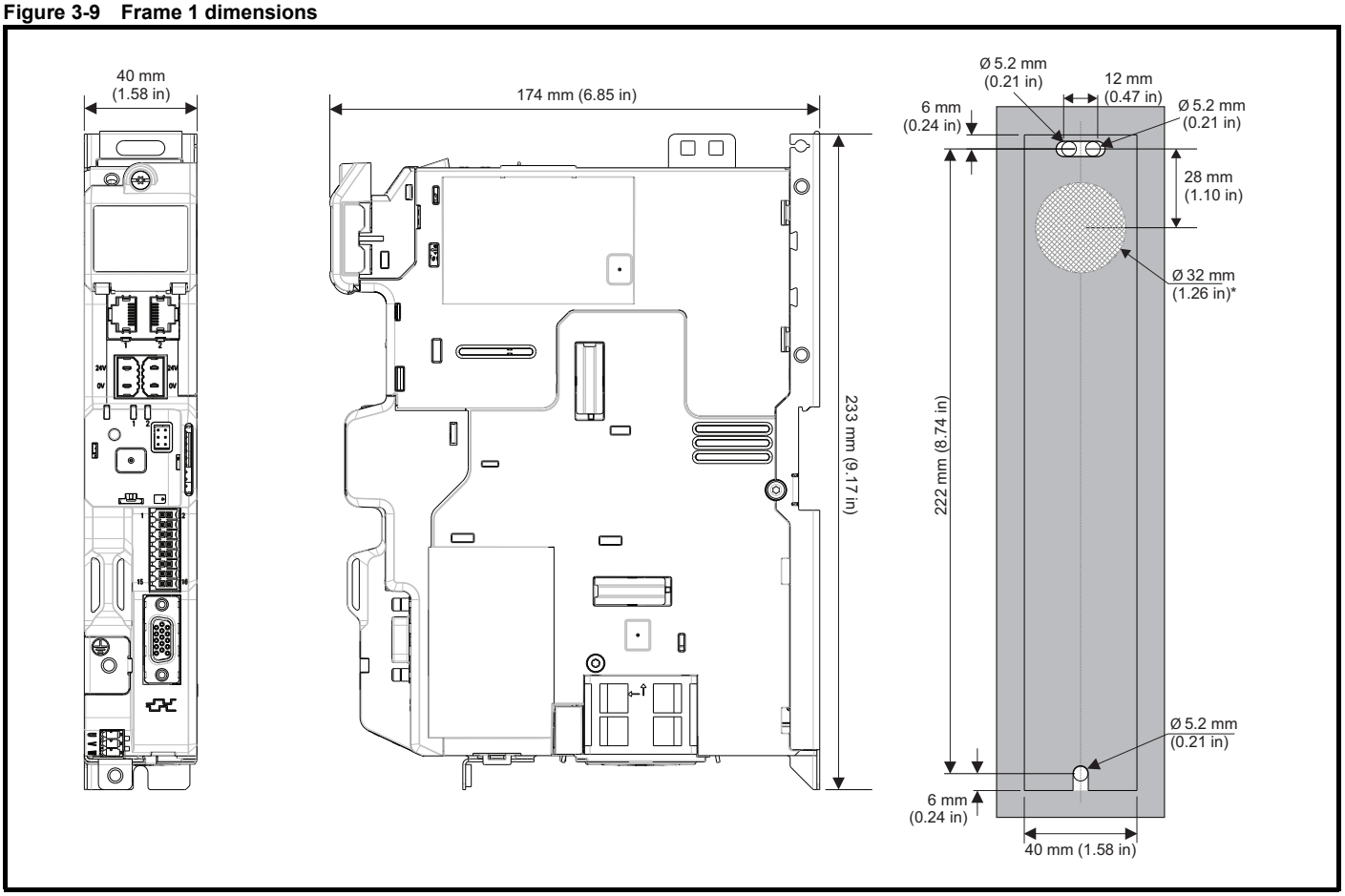

* Cut out only required for rear venting; refer to section 3.12 *Rear venting* on page 36.

Figure 3-10 Frame 2 dimensions

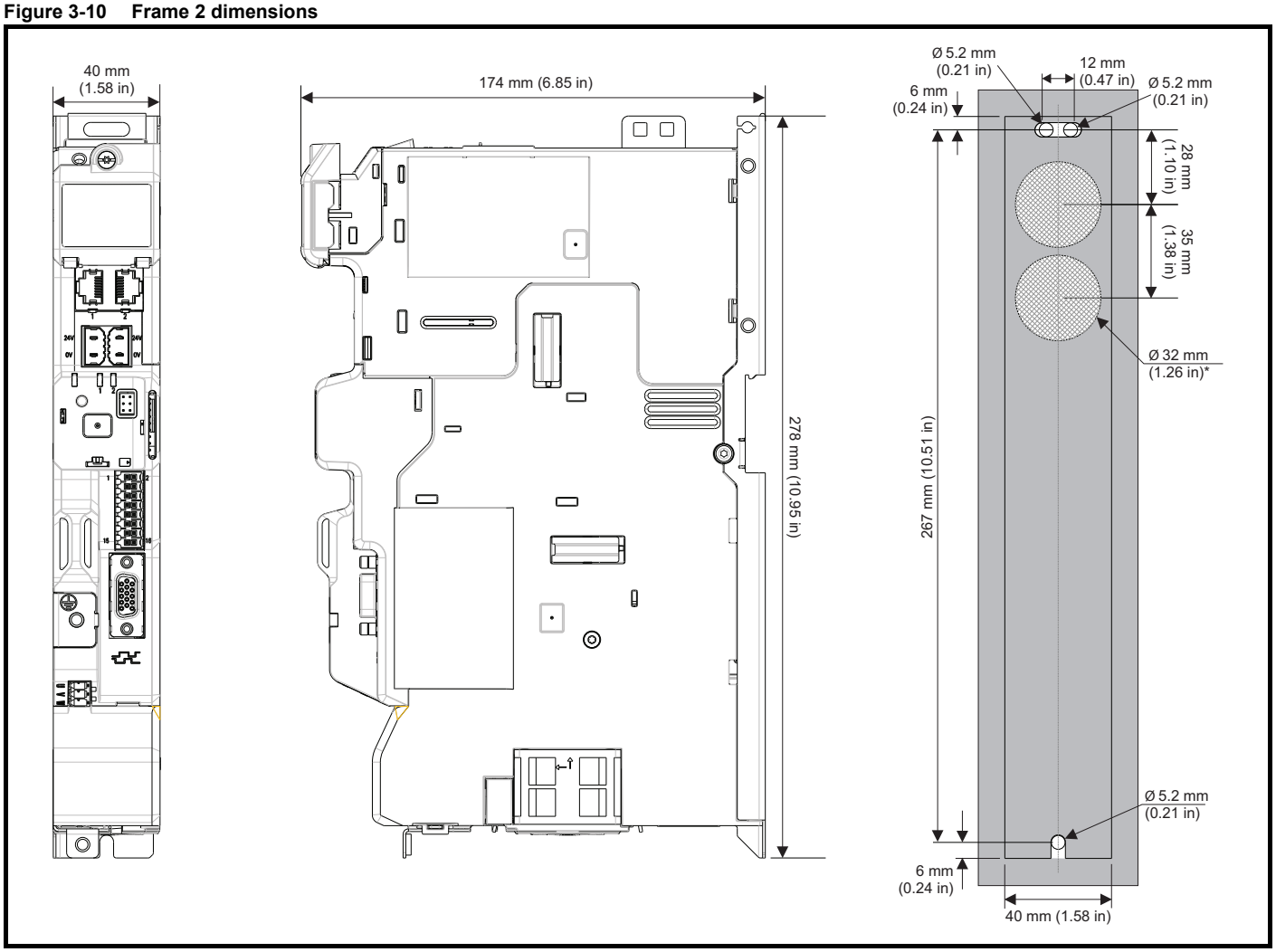

* Cut outs only required for rear venting; refer to section 3.12 *Rear venting* on page 36.

Figure 3-11 Frame 3 dimensions

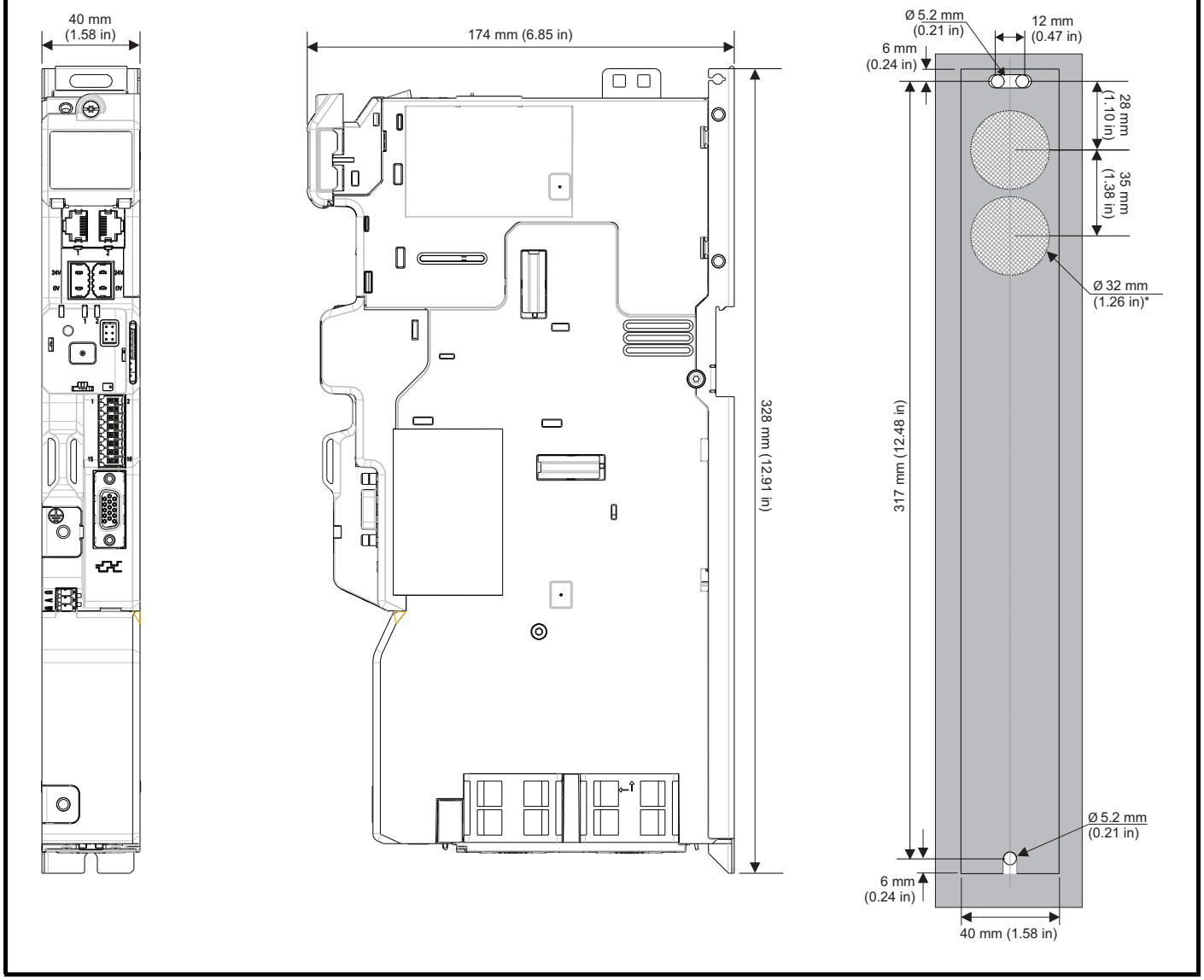

* Cut outs only required for rear venting; refer to section 3.12 *Rear venting* on page 36.

Mounting screws

For single axis drives stand alone, two M5 screws are required in the top mounting position and one in the lower mounting position. For multi axis drive mounting, including DIN rail alignment refer to section 5.7 *Multi axis system installation* on page 111.

3.6.2 Drive width with option module support installed

Figure 3-12 Drive width with option module support installed

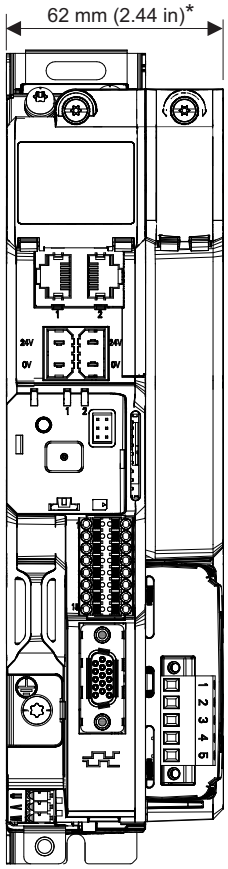

* Allow for up to +0.5 mm tolerance with each drive.

3.7 Ingress protection label

The ingress protection label (shown in Figure 3-13 below) must remain in place while the drive is mounted, and until all enclosure wiring has been completed. The label should be removed before first power up.

Figure 3-13 Ingress protection label

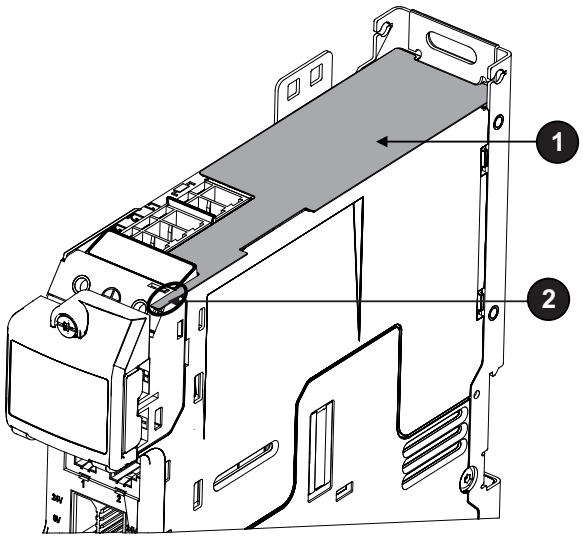

1. Ingress protection label (**Remove before use**).

2. Tear off tab (**Remove before use**).

3.8 Capacitor module dimensions

Figure 3-14 Capacitor module dimensions

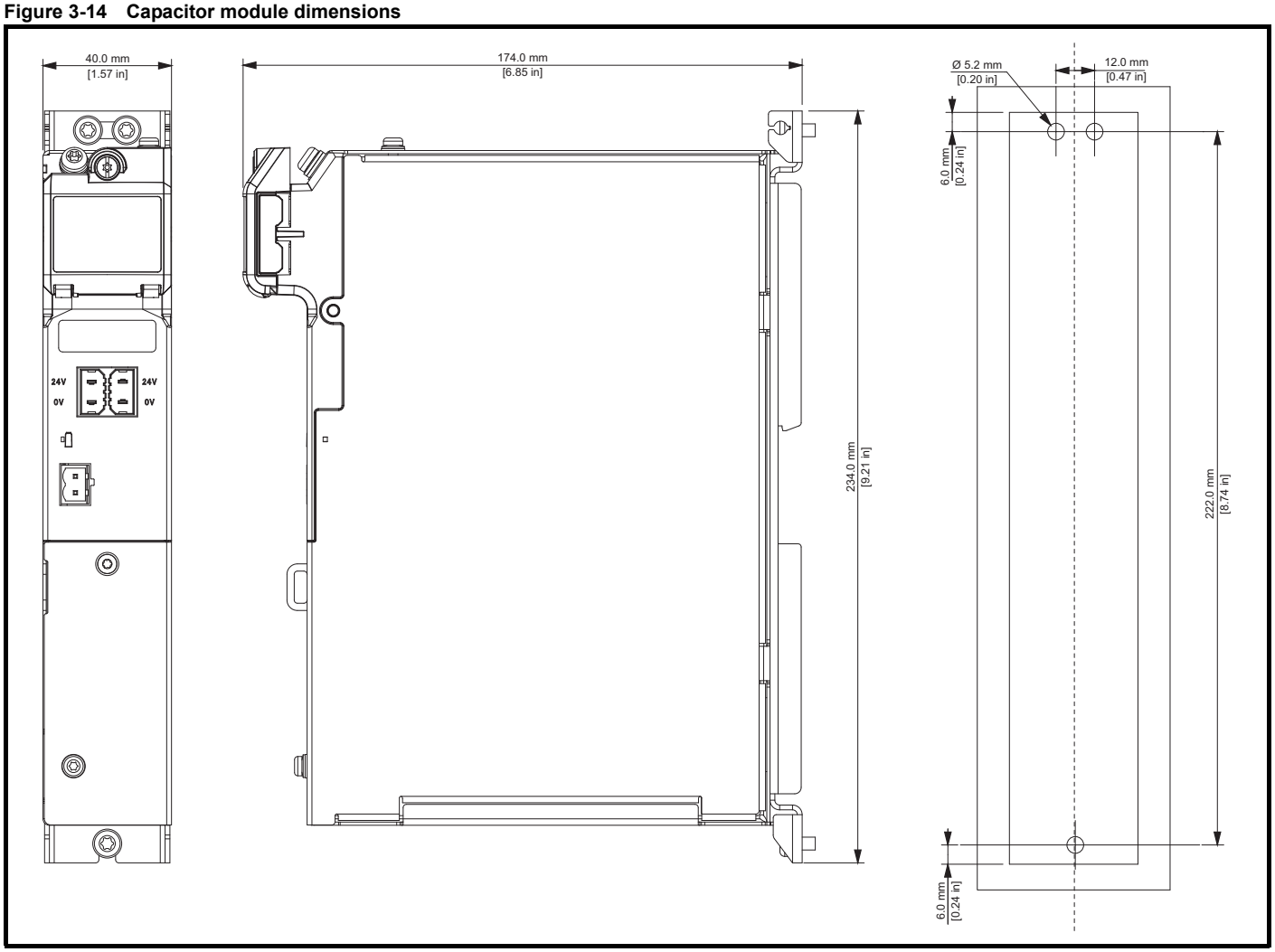

For all types of installations (i.e. Multi-axis with DIN rail & Multi-axis without DIN rail) use two screws at upper mounting position and one screw at lower mounting position

3.9 Horizontal mounting

Drives mounted in the horizontal position as shown in Figure 3-15 give the same thermal performance as drives mounted in the vertical position, no derating for horizontal mounting is necessary therefore when the drive is positioned as shown in Figure 3-15.

Figure 3-15 Horizontal mounting position

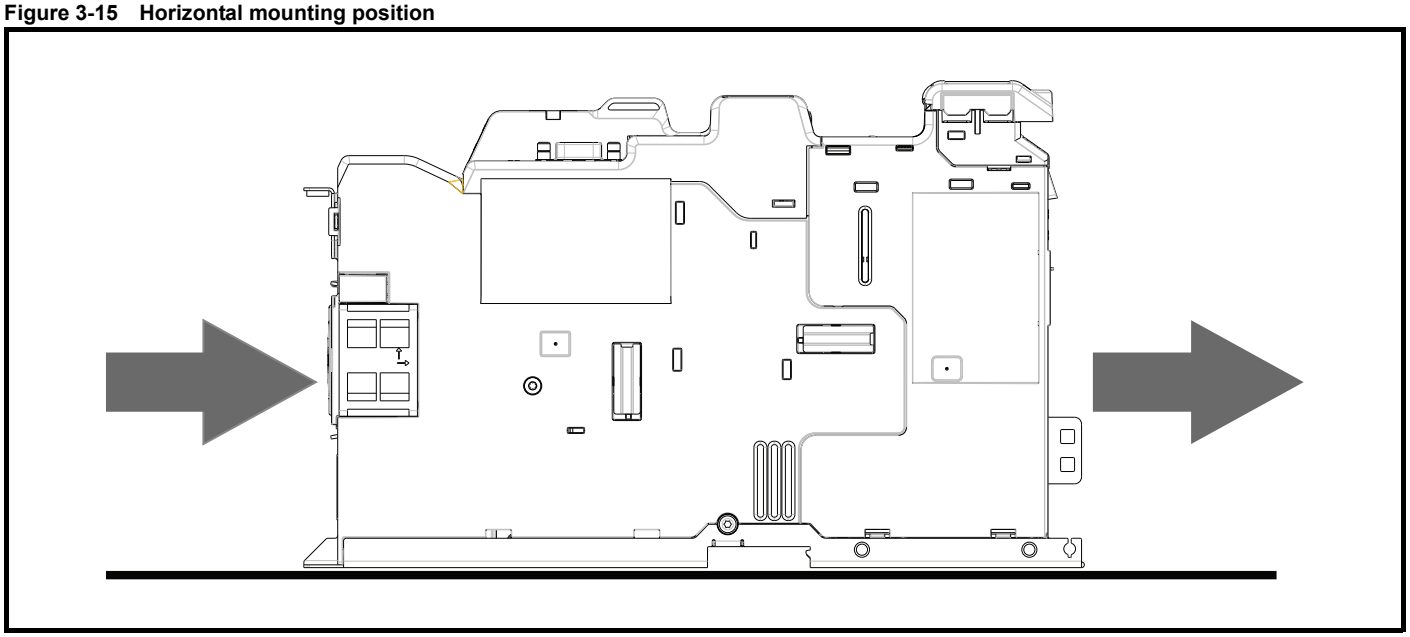

3.10 Multi axis installations

When installing multi axis drive or drive/capacitor module systems, the following sequence should be followed.

a. Align the drive/capacitor module over the DIN rail and into position.

b. Fit upper and lower mounting screws.

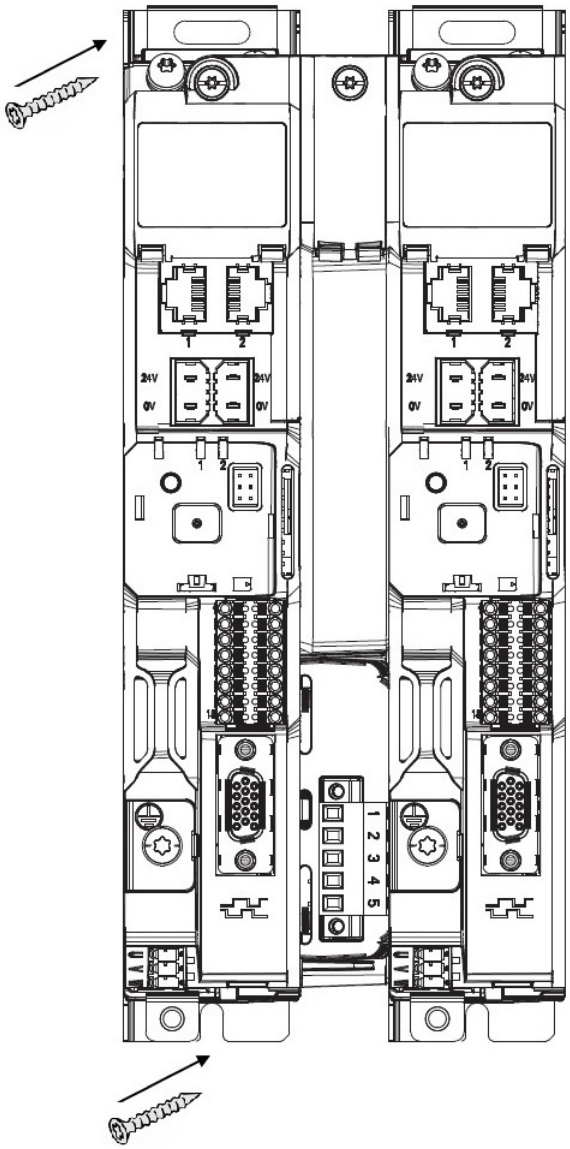

c. Fit ground busbar/s using the M4 x 8 screw and tighten to 2 Nm (17.7 lb in).

d. Fit the +ve DC busbar/s using the M4 x 8 screw and tighten to 2 Nm (17.7 lb in). Repeat this for the -ve DC busbar/s.

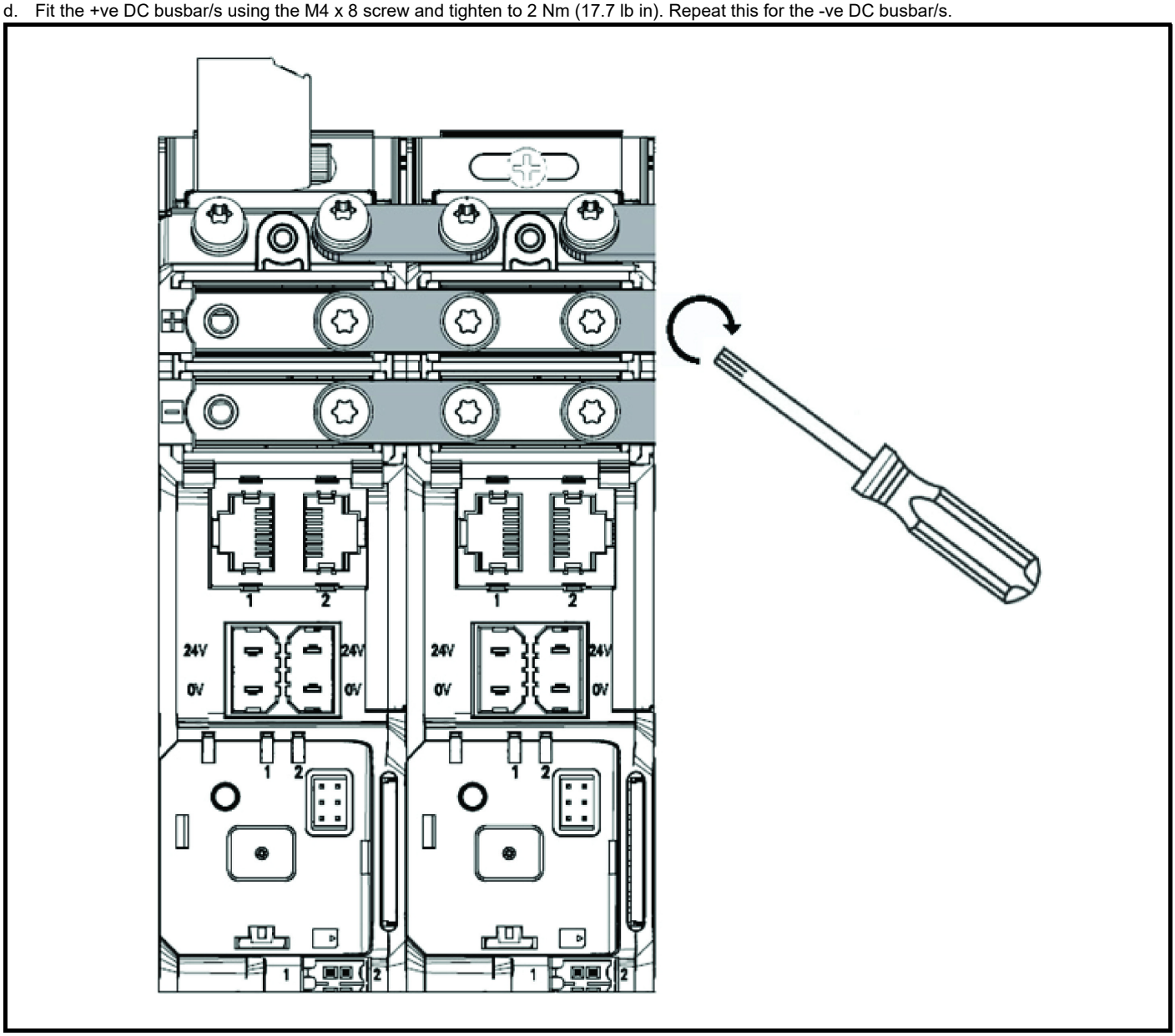

e. Fit the 24 V busbar link.

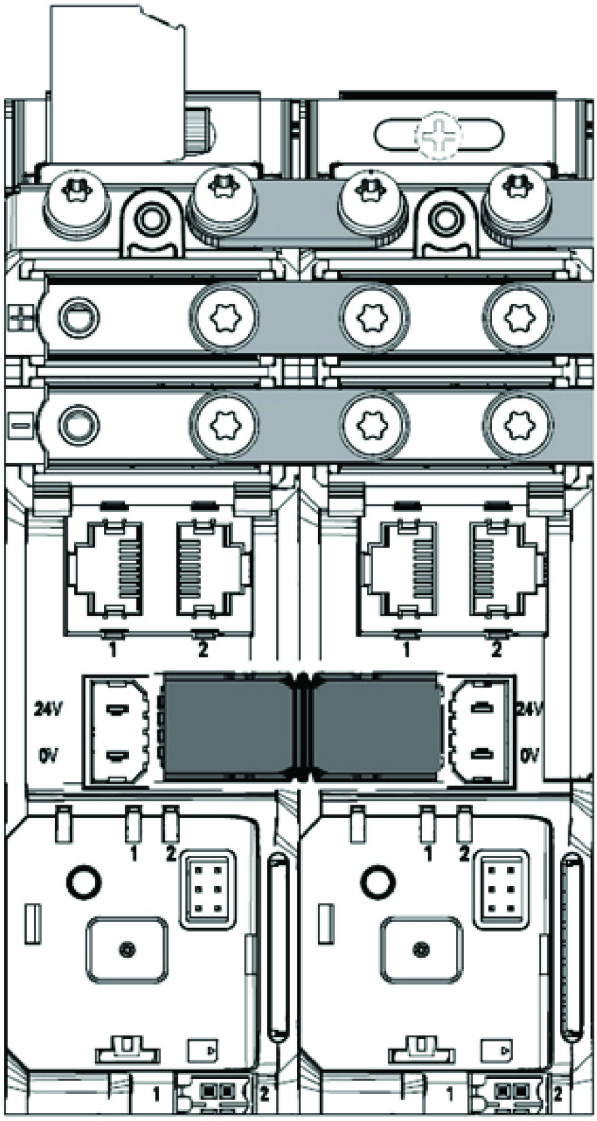

3.11 Enclosure layout

Please observe the clearances in the diagram below taking into account any appropriate notes for other devices / auxiliary equipment when planning the installation.

Figure 3-16 Enclosure layout

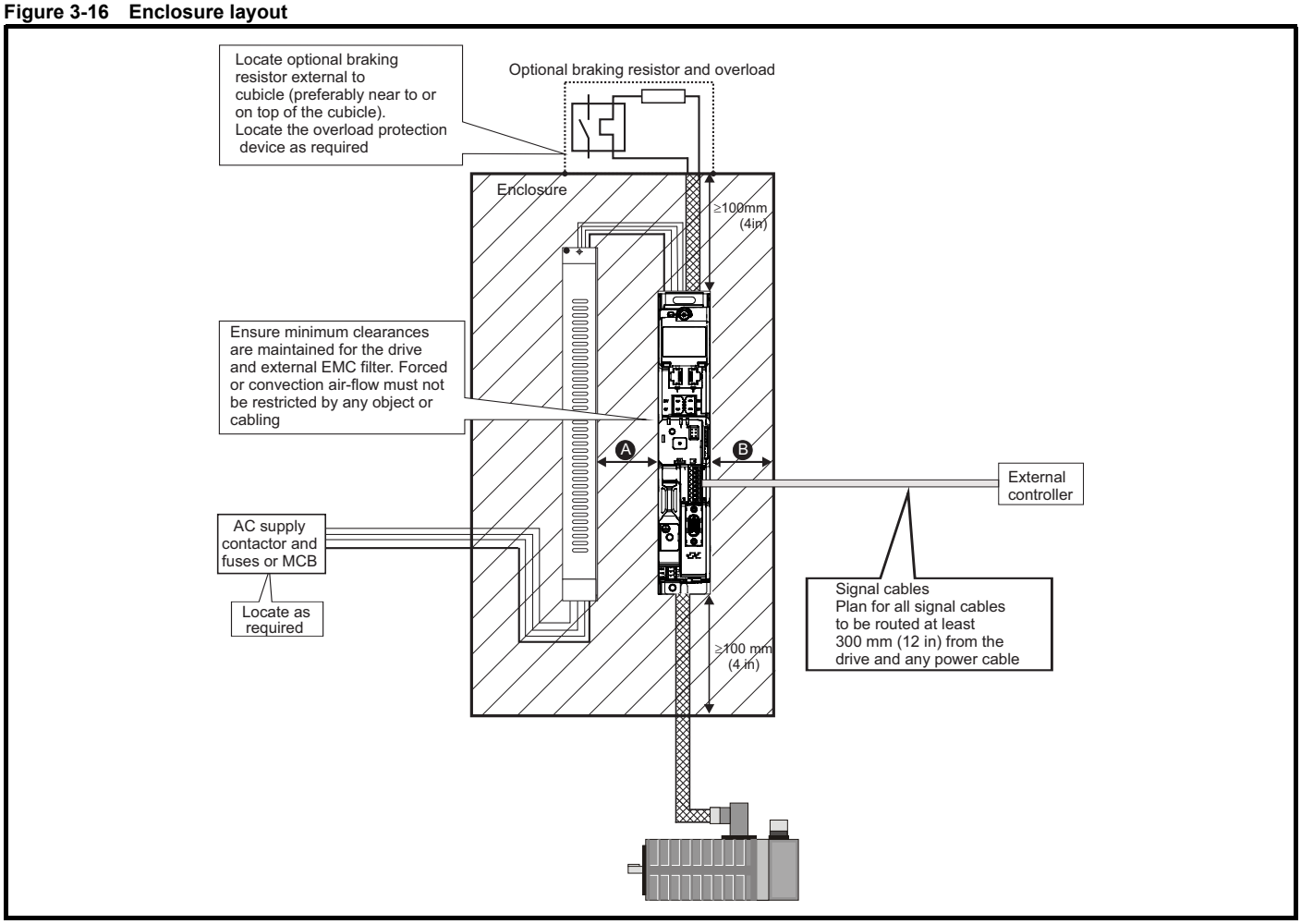

Table 3-1 Spacing required between drive / enclosure and drive / EMC filter

Drive Size	Spacing between EMC filter and drive (A)	Spacing between enclosure side wall and drive (B)
All	0 mm (0.00 in)	10 mm (0.39 in)

NOTE

Drives may be mounted side by side (0 mm).

3.12 Rear venting

The rear vent kits allow heated air to be exhausted from the rear of the enclosure via the rear of the drive rather than the top. This feature provides the following benefits:

- Reduction in enclosure size.
- Allow vertical stacking of drives.
- Reduce the need for a secondary enclosure fan.

Figure 3-17 Rear vent duct (frame 2 illustrated)

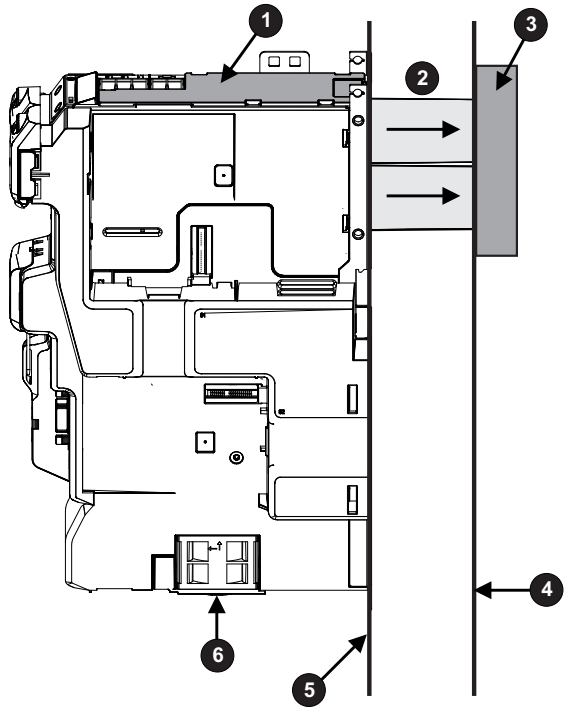

1. Rear venting top cover must be fitted.

2. Exhausted air, (rear vent duct)*.

3. A suitable cubicle vent guard may need to be fitted to maintain the enclosure IP rating.

4. Enclosure rear panel.

5. Enclosure back plate.

6. Air intake, (cooling fan).

* The Frame 1 rear vent kit is supplied with one duct, the frame 2/3 rear vent kit is supplied with two ducts. Refer to section 2.10.1 *Installation and system accessory kits available with Digitax HD M75X series* on page 16.

Figure 3-18 Installation of rear vent kit (frame 1 shown)

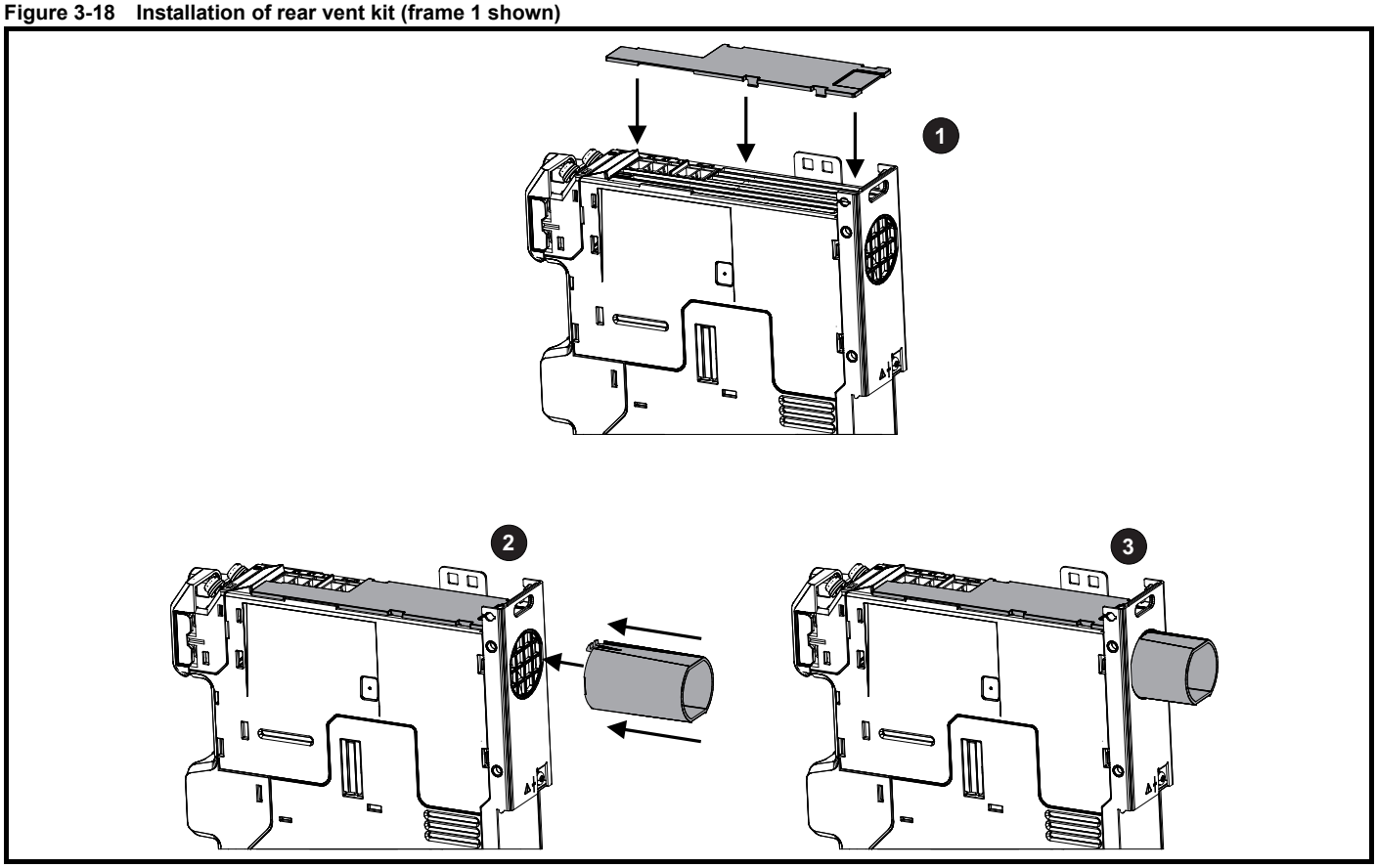

1. Attach the rear vent top cover to the top of the drive.

2. Align the rear duct tube with the exhaust port; ensure the retaining clips on the tube are vertically aligned. Refer to section 3.6.1 *Drive dimensions* on page 26 for duct through hole sizing.

3. Click the duct tube into position on the exhaust port.

NOTE

The rear duct tube can be cut to length as required.

For compact multi axis installations, the rear venting kit allows drives to be vertically mounted one above the other, where this is the case, a minimum clearance of 100 mm should be maintained between drives.

Figure 3-19 Minimum clearance when vertical mounting

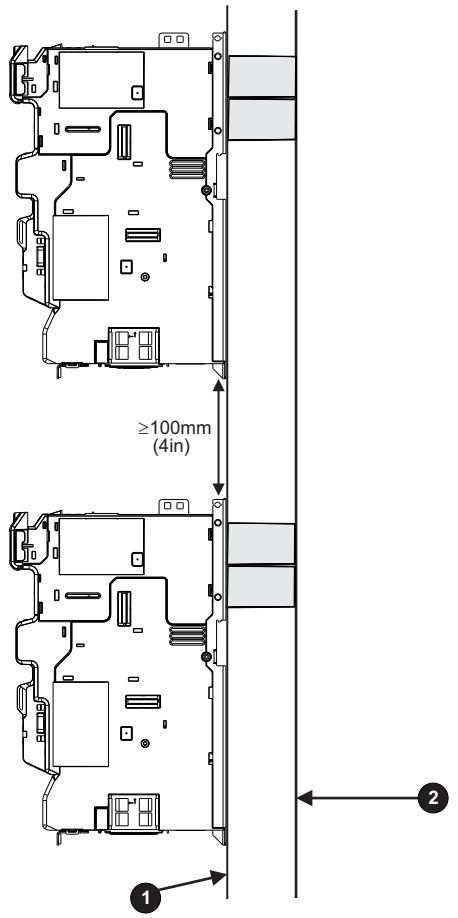

1. Enclosure back plate.
2. Enclosure rear panel.

NOTE

A current derate must be applied to the drive if the rear vent kit is installed. Derating information is provided in section 6.1 *Drive technical data* on page 117.

Failure to do so may result in nuisance tripping.

3.13 Enclosure sizing

1. Add the dissipation figures from section 6.1.4 *Power dissipation* on page 125 for each drive that is to be installed in the enclosure.
2. If an external EMC filter is to be used with each drive, add the dissipation figures from section 6.1.29 *EMC filter ratings* on page 136 for each external EMC filter that is to be installed in the enclosure.
3. If the braking resistor is to be mounted inside the enclosure, add the average power figures from for each braking resistor that is to be installed in the enclosure.
4. Calculate the total heat dissipation (in Watts) of any other equipment to be installed in the enclosure.
5. Add the heat dissipation figures obtained above. This gives a figure in Watts for the total heat that will be dissipated inside the enclosure.

Calculating the size of a sealed enclosure

The enclosure transfers internally generated heat into the surrounding air by natural convection (or external forced air flow); the greater the surface area of the enclosure walls, the better is the dissipation capability. Only the surfaces of the enclosure that are unobstructed (not in contact with a wall or floor) can dissipate heat.

Calculate the minimum required unobstructed surface area $\mathbf{A_e}$ for the enclosure from:

$$A_e = \frac{P}{k(T_{int} - T_{ext})}$$

Where:

$\mathbf{A_e}$	Unobstructed surface area in m² (1 m² = 10.9 ft²)
$\mathbf{T_{ext}}$	Maximum expected temperature in °C *outside* the enclosure
$\mathbf{T_{int}}$	Maximum permissible temperature in °C *inside* the enclosure
P	Power in Watts dissipated by *all* heat sources in the enclosure
k	Heat transmission coefficient of the enclosure material in W/m²/°C

Example

To calculate the size of an enclosure for the following:

- Two drives operating
- External EMC filter for each drive
- Braking resistors are to be mounted outside the enclosure
- Maximum ambient temperature inside the enclosure: 40 °C
- Maximum ambient temperature outside the enclosure: 30 °C

For example, if the power dissipation from each drive is 187 W and the power dissipation from each external EMC filter is 9.2 W.

Total dissipation: 2 x (187 + 9.2) = 392.4 W

NOTE

Power dissipation for the drives and the external EMC filters can be obtained from Chapter 6 *Technical data* on page 117.

The enclosure is to be made from painted 2 mm sheet steel having a heat transmission coefficient of 5.5 W/m²/°C. Only the top, front, and two sides of the enclosure are free to dissipate heat.

The value of 5.5 W/m²/°C can generally be used with a sheet steel enclosure (exact values can be obtained by the supplier of the material). If in any doubt, allow for a greater margin in the temperature rise.

Figure 3-20 Enclosure having front, sides and top panels free to dissipate heat

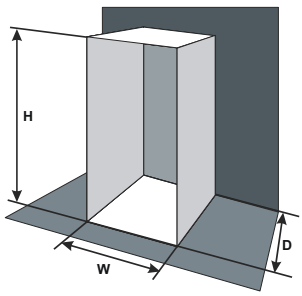

Insert the following values:

T_{int}	40 °C
T_{ext}	30 °C
k	5.5
P	392.4 W

The minimum required heat conducting area is then:

$$A_e = \frac{392.4}{5.5(40-30)}$$

= 7.135 m² (77.8 ft²) (1 m² = 10.9 ft²)

Estimate two of the enclosure dimensions - the height (H) and depth (D), for instance. Calculate the width (W) from:

$$W = \frac{A_e - 2HD}{H + D}$$

Inserting **H** = 2 m and **D** = 0.6 m, obtain the minimum width:

$$W = \frac{7.135 - (2 \times 2 \times 0.6)}{2 + 0.6}$$

= 1.821 m (17.1 in)

If the enclosure is too large for the space available, it can be made smaller only by attending to one or all of the following:

- Using a lower PWM switching frequency to reduce the dissipation in the drives
- Reducing the ambient temperature outside the enclosure, and/or applying forced-air cooling to the outside of the enclosure
- Reducing the number of drives in the enclosure
- Removing other heat-generating equipment
- Using rear vent duct

Calculating the air-flow in a ventilated enclosure

The dimensions of the enclosure are required only for accommodating the equipment. The equipment is cooled by the forced air flow.

Calculate the minimum required volume of ventilating air from:

$$V = \frac{3kP}{T_{int} - T_{ext}}$$

Where:

V	Air-flow in m³ per hour (1 m³/hr = 0.59 ft³/min)
T_{ext}	Maximum expected temperature in °C *outside* the enclosure
T_{int}	Maximum permissible temperature in °C *inside* the enclosure

P Power in Watts dissipated by *all* heat sources in the enclosure

k Ratio of $\frac{P_o}{P_I}$

Where:

P_0 is the air pressure at sea level

P_I is the air pressure at the installation

Typically use a factor of 1.2 to 1.3, to allow also for pressure-drops in dirty air-filters.

Example

To calculate the size of an enclosure for the following:

- Three drives operating
- External EMC filter for each drive
- Braking resistors are to be mounted outside the enclosure
- Maximum ambient temperature inside the enclosure: 40 °C
- Maximum ambient temperature outside the enclosure: 30 °C

For example, dissipation of each drive: 101 W and dissipation of each external EMC filter: 6.9 W (max).

Total dissipation: 3 x (101 + 6.9) = 323.7 W

Insert the following values:

T_{int} 40 °C

T_{ext} 30 °C

k 1.3

P 323.7 W

Then:

$$V = \frac{3 \times 1.3 \times 323.7}{40 - 30}$$

= **126.2 m³/hr (74.5 ft³/min)** (1 m³/hr = 0.59 ft³/min)

3.14 Enclosure design and drive ambient temperature

Drive derating is required for operation in high ambient temperatures

Totally enclosing the drive in either a sealed cabinet (no airflow) or in a well ventilated cabinet makes a significant difference on drive cooling.

The chosen method affects the ambient temperature value (T_{rate}) which should be used for any necessary derating to ensure sufficient cooling for the whole of the drive.

The ambient temperature for the different combinations is defined below:

1. Totally enclosed with no air flow (< 2 m/s) over the drive $T_{rate} = T_{int} + 5$ °C
2. Totally enclosed with air flow (> 2 m/s) over the drive $T_{rate} = T_{int}$

Where:

T_{int} = Temperature inside the cabinet

T_{rate} = Temperature used to select current rating from tables in Chapter 6 *Technical data* on page 117

3.15 Drive cooling fan operation

The drive is ventilated by an internally mounted fan(s).

The drive cooling fan on all sizes is variable speed. The drive controls the speed at which the fan runs based on the drive's thermal model system. The maximum speed at which the fan operates can be limited in Pr **06.045**. This could incur an output current derating. Refer to section 3.21 *Fan replacement* on page 51 for information on fan removal.

3.16 Braking resistor

3.16.1 Compact braking resistor



When using the compact brake resistor the drive must be mounted vertically.

The Digitax HD M75X series has been designed with an optional space-saving side mounted braking resistor. The resistor must be installed together with an SI option module mounting kit. When the compact braking resistor is used, an external thermal protection device is not required as the resistor is designed such that it will fail safely under any fault conditions. The in-built software overload protection is set-up at default to protect the resistor.

Table 3-2 Digitax HD M75X series compact braking resistor kit part number

Model size	Part number
All	9500-1049

WARNING

The compact braking resistor must only be used with the Digitax HD M75X drive range.

Figure 3-21 Installing a compact braking resistor

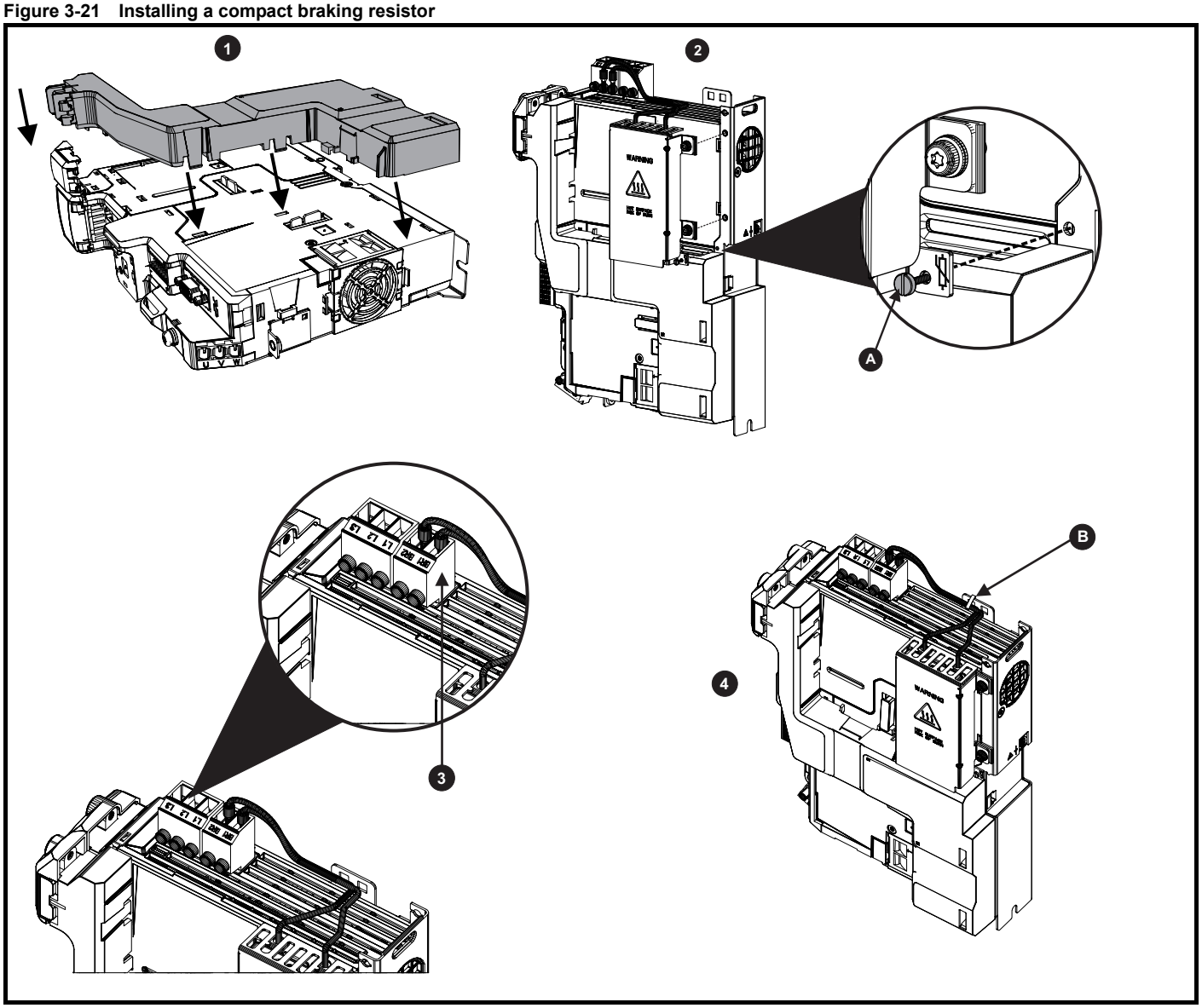

1. Install SI Option module mounting kit.

2. Secure the compact brake assembly to the metal side panel using two M3 mounting screws. Attach and secure the M2 screw (**A**).

3. Connect the brake resistor cables to terminals BR1 and BR2 on the brake terminal connector.

4. Secure cables to bracket (**B**).

WARNING

The M2 screw forms part of the thermal protection system for the compact brake resistor and therefore **MUST** be fitted. Maximum torque 0.3 N m.

3.16.2 External braking resistor

Braking resistor: High temperatures and overload protection
Braking resistors can reach high temperatures. Locate braking resistors so that damage cannot result. Use cable having insulation capable of withstanding the high temperatures.

External brake resistors are available from Nidec Industrial Automation. They can be mounted in the enclosure as per mounting recommendation in Figure 3-16 on page 35 using mounting bracket part number 6541-0187 (shown in Figure 3-23). Figure 3-22 below shows the brake resistor mounted on the mounting bracket. Two M4 screws and nuts (**2**) can be used to fix the brake resistor to the mounting bracket. One M4 nut with washer (**1**) is provided to use for the ground connection. The brake resistor is equipped with a thermal switch, the thermal switch should be integrated in the control circuit by the user.

Figure 3-22 Brake resistor with the mounting bracket

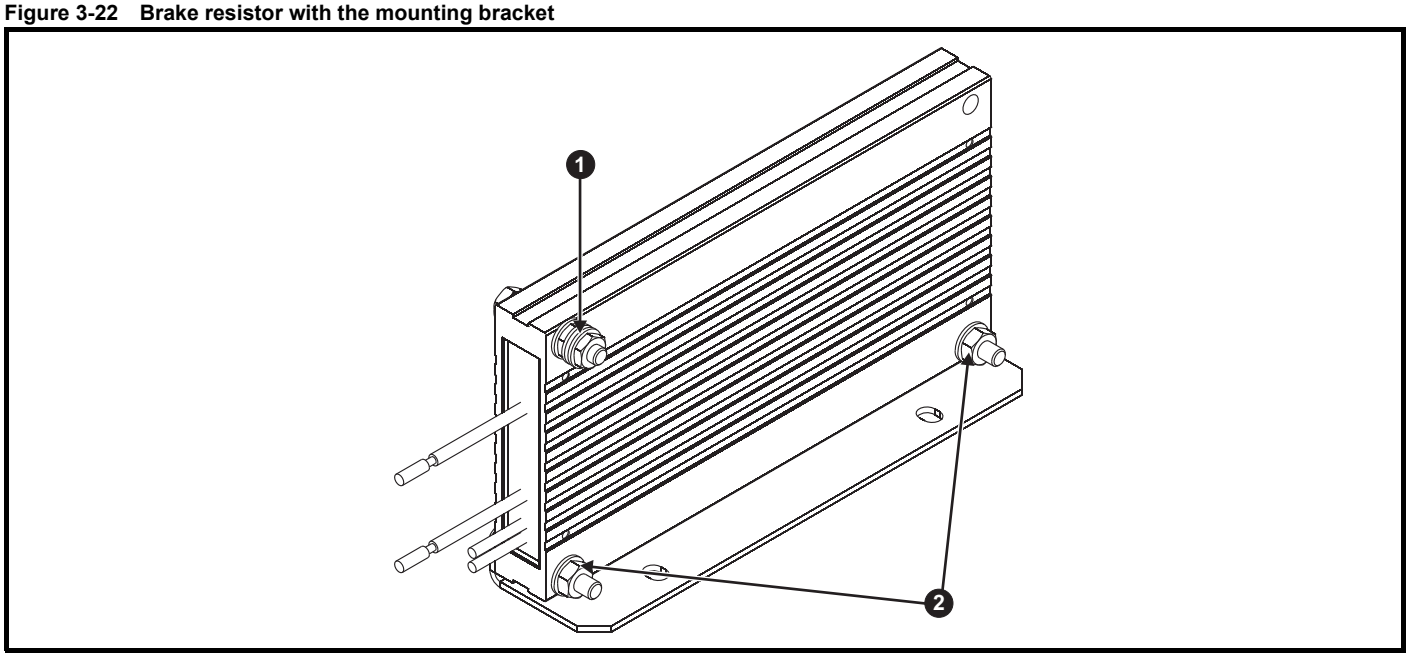

1. Ground connection (1 x M4 nut and washer).
2. Attaching the brake resistor to the mounting bracket (using 2 x M4 screws and nuts).

Figure 3-23 Mounting bracket dimensions

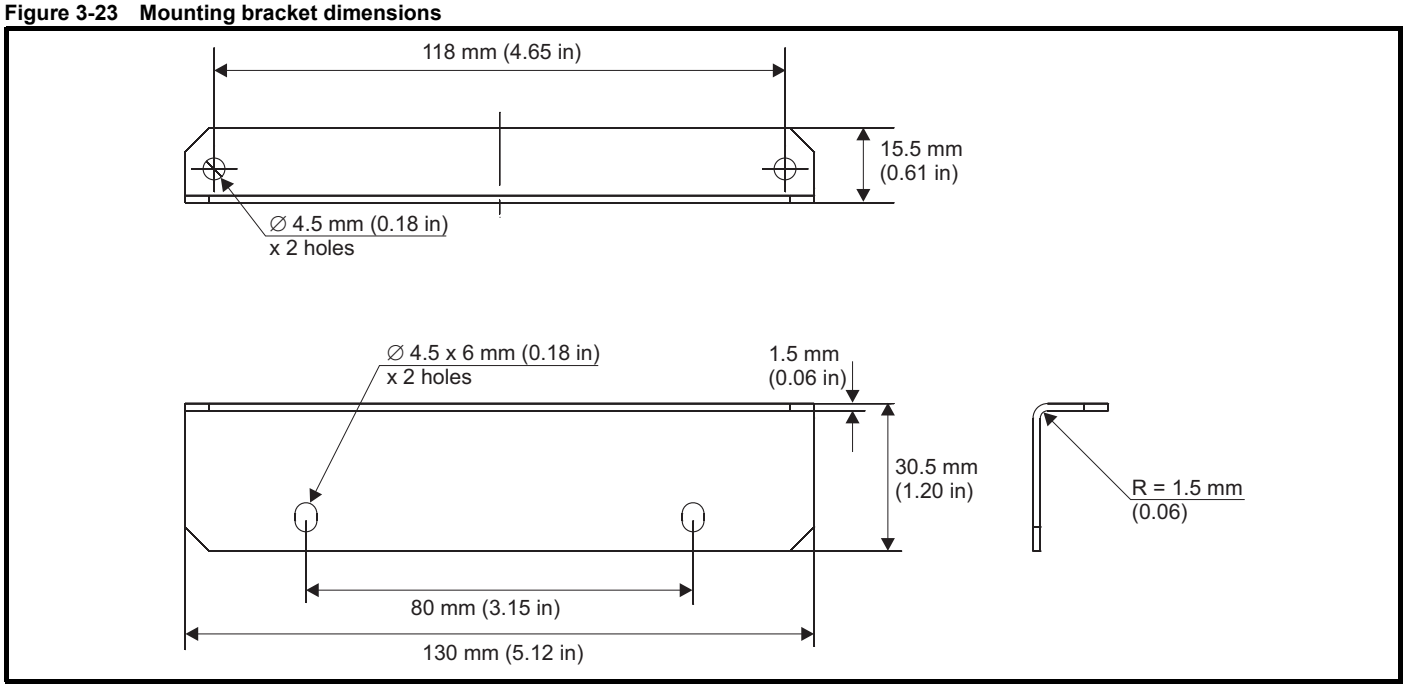

Figure 3-24 Brake resistor dimensions

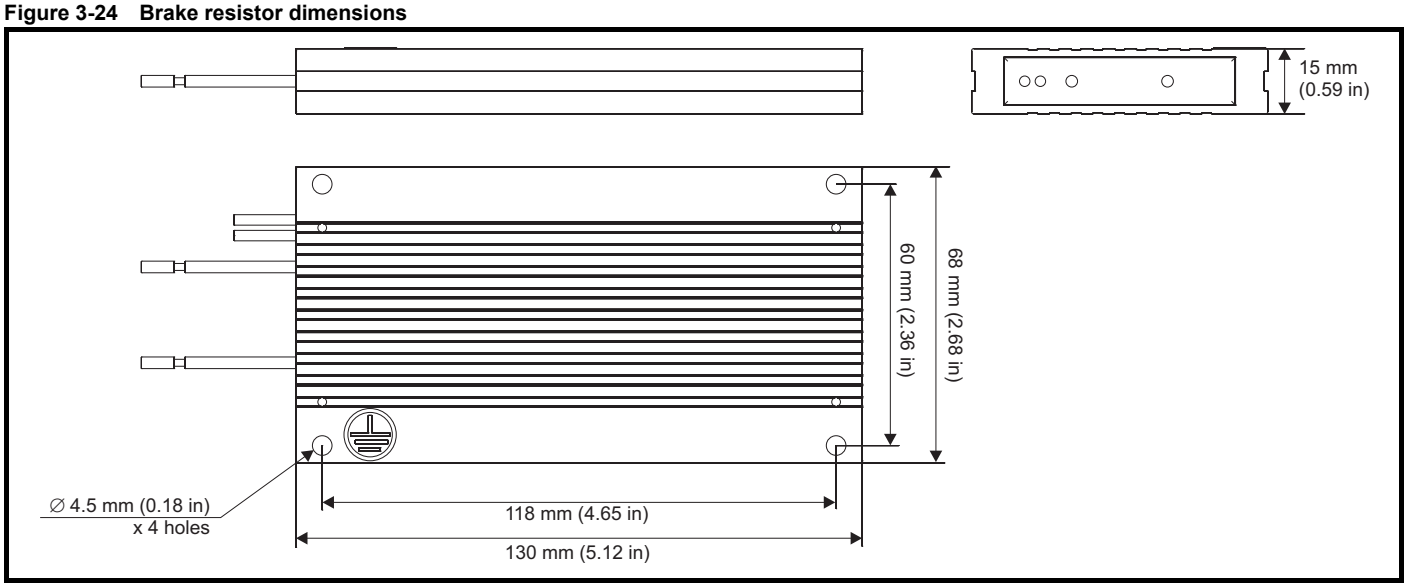

3.17 External EMC filter

3.17.1 Optional external EMC filter dimensions

Figure 3-25 External EMC filter dimensions (4200-3503)

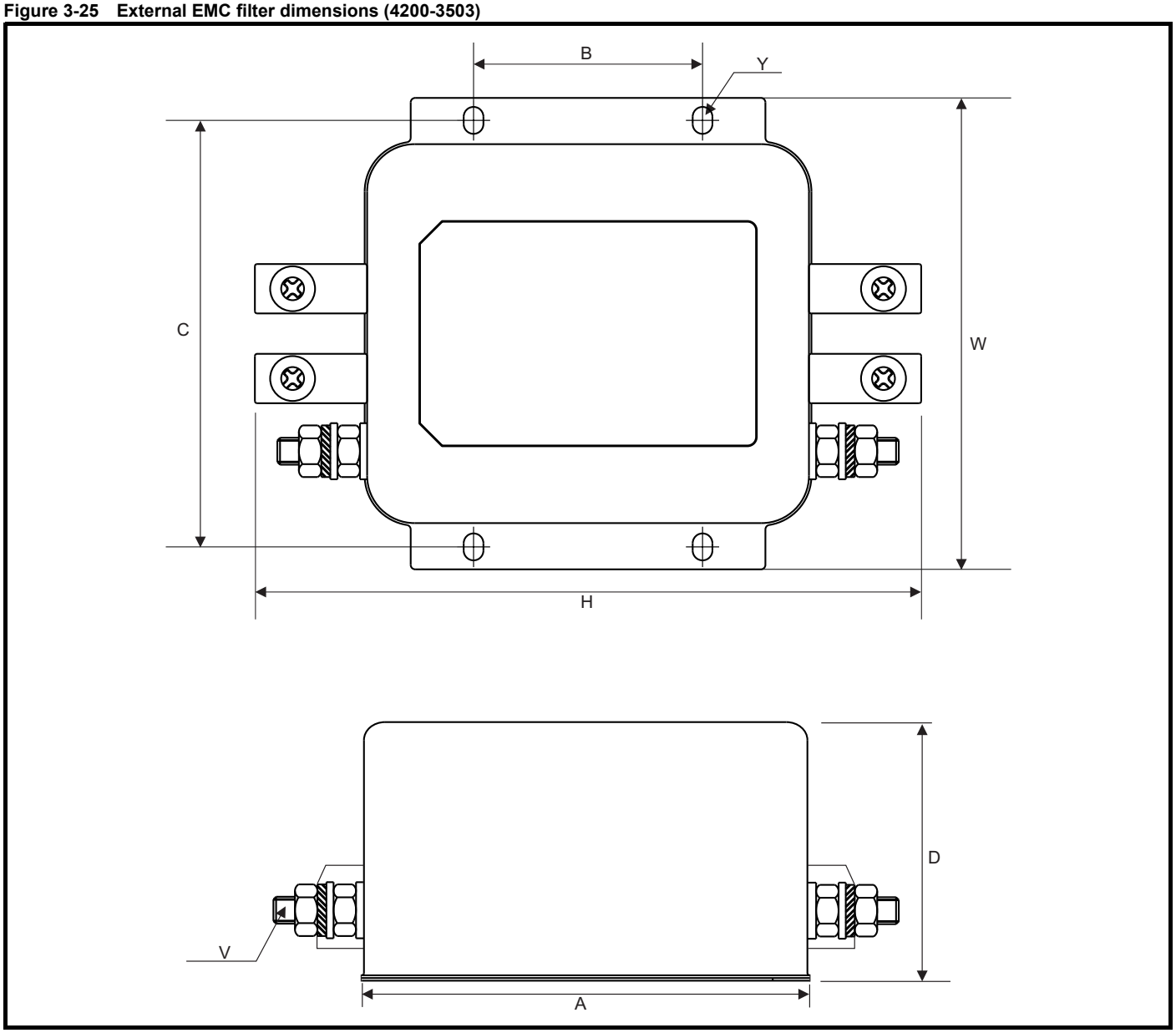

Table 3-3 External EMC filter dimensions (4200-3503)

Part number	A	B	C	D	H	W	V	Y
4200-3503	99.5 mm (3.91 in)	51 mm (2.01 in)	95 mm (3.74 in)	57.6 mm (2.27 in)	149.5 mm (5.89 in)	105 mm (4.13 in)	M6	6 mm x 4.4 mm (0.24 x 0.17 in)

Figure 3-26 External EMC filter dimensions (4200-5033)

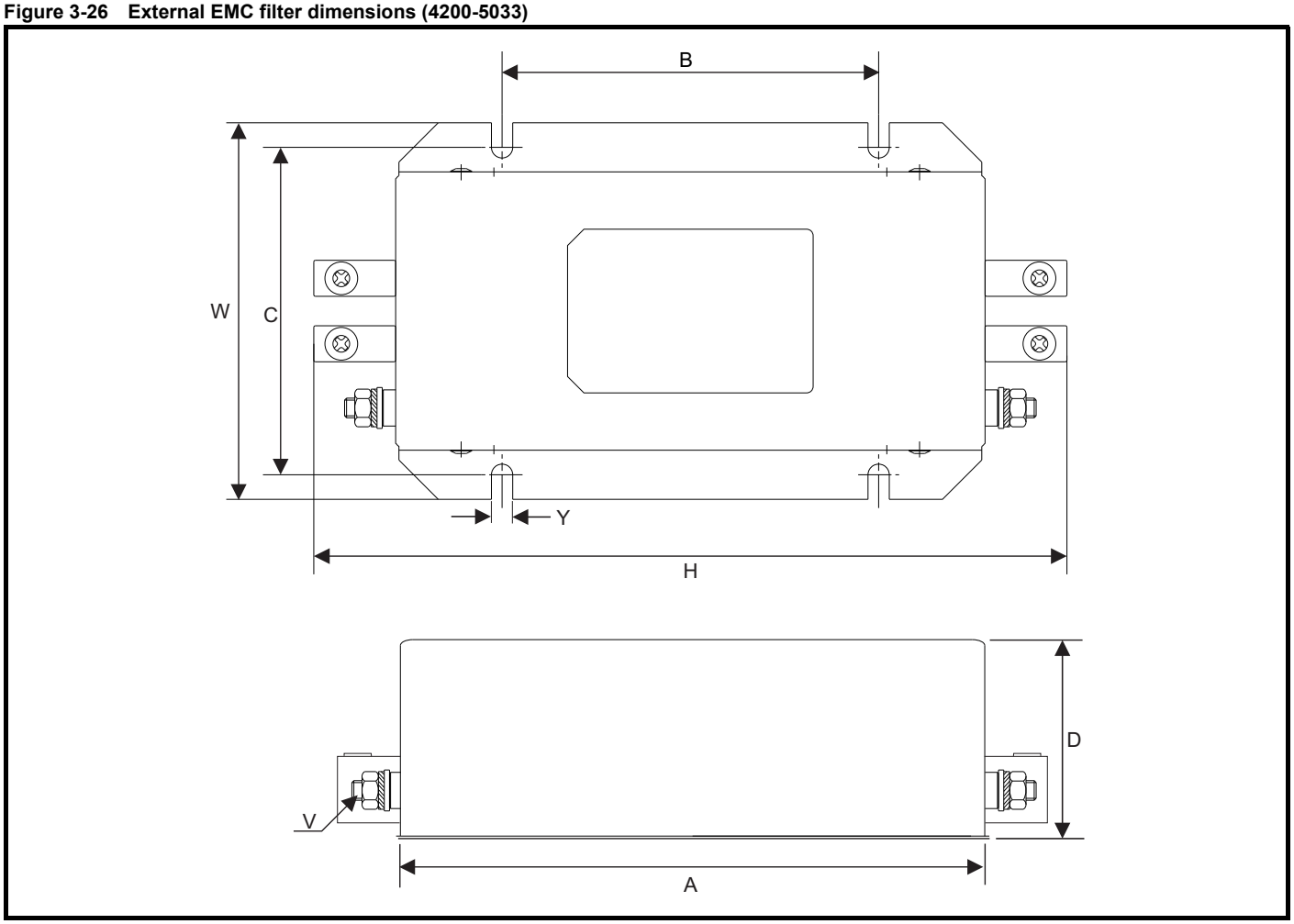

Table 3-4 External EMC filter dimensions (4200-5033)

Part number	A	B	C	D	H	W	V	Y
4200-5033	180 mm (7.09 in)	115 mm (4.53 in)	100 mm (3.94 in)	60 mm (2.36 in)	230 mm (9.06 in)	115 mm (4.53 in)	M6	6.5 mm (0.256 in)

Figure 3-27 External EMC filter dimensions (4200-6034)

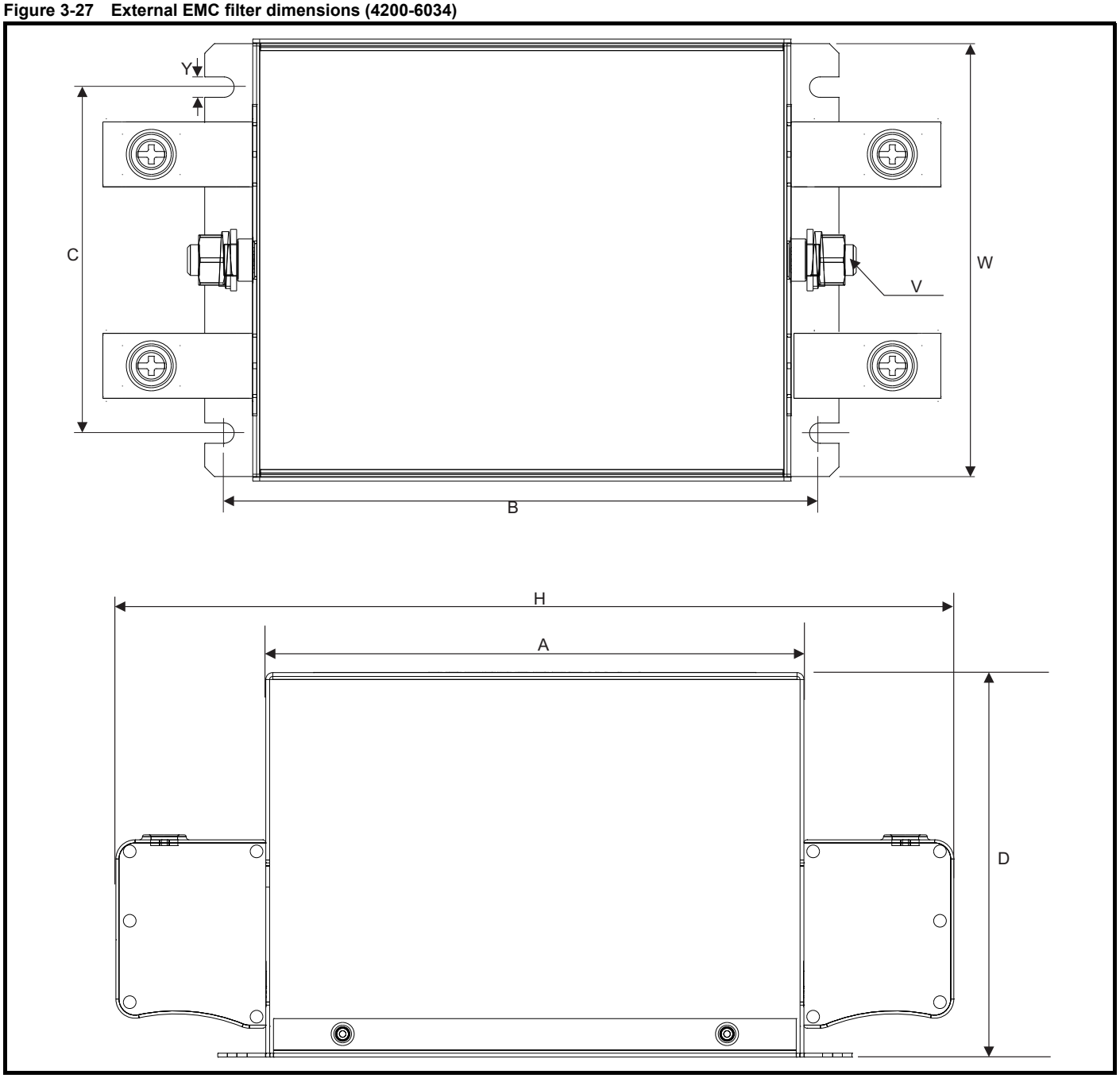

Table 3-5 External EMC filter dimensions (4200-6034)

Part number	A	B	C	D	H	W	V	Y
4200-6034	140 mm (5.51 in)	155 mm (6.10 in)	90 mm (3.54 in)	100 mm (3.94 in)	243 mm (9.57 in)	115 mm (4.53 in)	M8	5.3 mm (0.21 in)

Figure 3-28 External EMC filter dimensions (4200-6001 and 4200-6002)

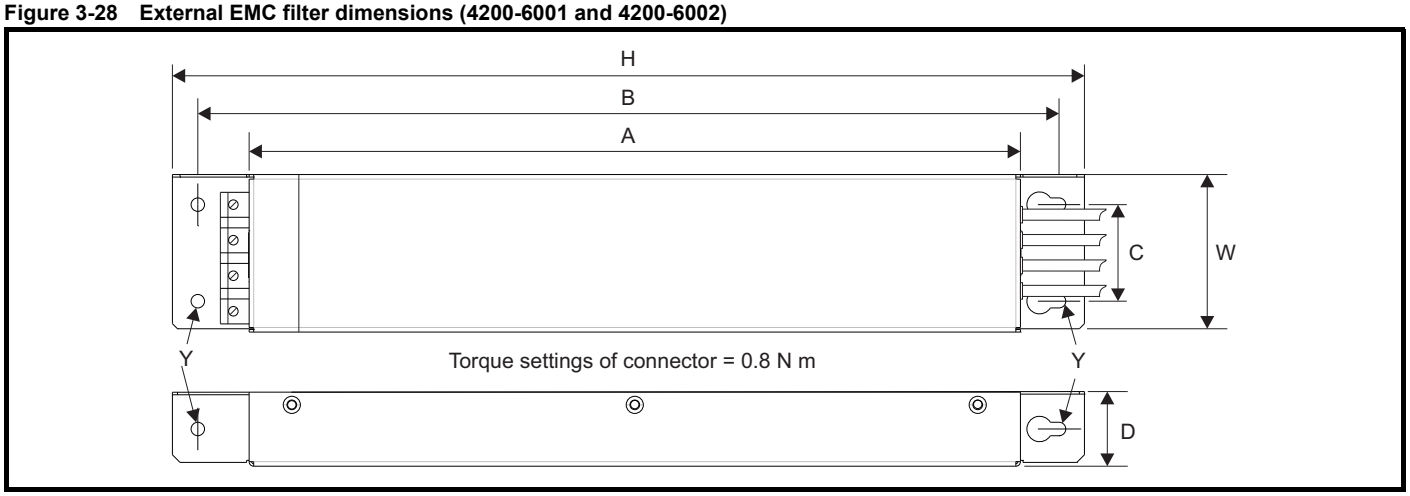

Table 3-6 External EMC filter dimensions (4200-6001 and 4200-6002)

Part number	A	B	C	D	H	W	Y
4200-6001	304 mm (11.97 in)	339 mm (13.35 in)	38 mm (1.50 in)	29 mm (1.14 in)	359 mm (14.13 in)	61 mm (2.40 in)	5.3 mm (0.21 in)
4200-6002							

Figure 3-29 External EMC filter dimensions

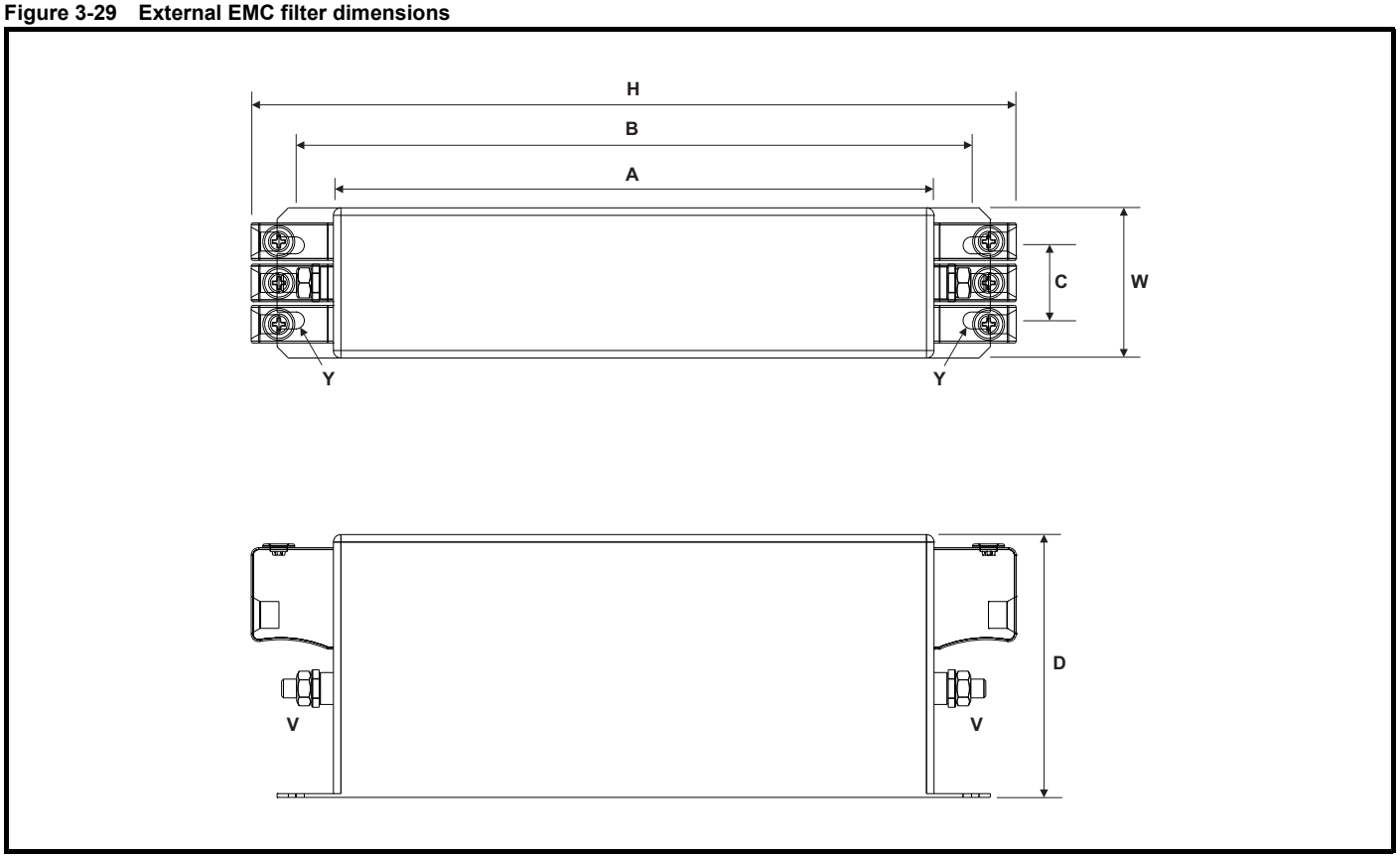

Table 3-7 External EMC filter dimensions

Part number	A	B	C	D	H	W	V	Y
4200-1644	220 mm (8.66 in)	235 mm (9.25 in)	25 mm (0.98 in)	70 mm (2.76 in)	264 mm (10.39 in)	45 mm (1.77 in)	M5	5.4 mm
4200-8744	160 mm (6.30 in)	180 mm (7.09 in)	20 mm (0.79 in)	70 mm (2.76 in)	204 mm (8.03 in)	40 mm (1.57 in)	M5	4.5 mm
4200-3233	280 mm (11.02 in)	295 mm (11.61 in)	30 mm (1.18 in)	85 mm (3.35 in)	330 mm (13.00 in)	50 mm (1.97 in)	M6	5.4 mm
4200-5833	240 mm (9.45 in)	255 mm (10.04 in)	30 mm (1.18 in)	85 mm (3.35 in)	290 mm (11.42 in)	50 mm (1.97 in)	M5	5.4 mm
4200-5534	220 mm (8.66 in)	235 mm (9.25 in)	60 mm (2.36 in)	90 mm (3.54 in)	298 mm (11.73 in)	85 mm (3.35 in)	M6	5.4 mm
4200-7534	240 mm (9.45 in)	255 mm (10.04 in)	60 mm (2.36 in)	135 mm (5.31 in)	318 mm (12.52 in)	80 mm (3.15 in)	M6	6.5 mm
4200-0035	240 mm (9.45 in)	255 mm (10.04 in)	65 mm (2.56 in)	150 mm (5.91 in)	330 mm (13.00 in)	90 mm (3.54 in)	M10	6.5 mm

Table 3-8 Drive and EMC filter cross reference

Model	Number of phases	Part number
200 V		
01200022	1	4200-3503
01200040	1	
01200065	1	
02200090	1	4200-5033
02200120	1	
03200160	1	4200-6034
01200022	3	4200-8744
01200040	3	4200-6002
01200065	3	4200-6001
02200090	3	4200-5833
02200120	3	4200-5833
03200160	3	4200-5833
400 V		
01400015 to 01400042	3	4200-8744
02400060 to 02400105	3	4200-1644
03400135 to 03400160	3	4200-5833

3.17.2 EMC filter torque settings

Table 3-9 Optional external EMC filter terminal data

Part number	Power connections		Ground connections	
	Max cable size	Recommended torque	Ground stud size	Max torque
4200-3503	16 mm² (AWG 6)	1.5 to 1.8 N m (13.3 to 15.9 lb in)	M6	4 N m (35.4 lb in)
4200-5033	16 mm² (AWG 6)	1.5 to 1.8 N m (13.3 to 15.9 lb in)	M6	4 N m (35.4 lb in)
4200-6034	35 mm² (AWG 2)	4 to 4.5 N m (35.4 to 39.8 lb in)	M8	9 N m (79.7 lb in)
4200-6001	6 mm² (AWG 10)	0.8 N m max (7.1 lb in max)		
4200-6002	6 mm² (AWG 10)	0.8 N m max (7.1 lb in max)		
4200-1644	10 mm² (AWG 8)	1.5 to 1.8 N m (13.3 to 15.9 lb in)	M5	2.2 N m (19.5 lb in)
4200-8744	10 mm² (AWG 8)	1.5 to 1.8 N m (13.3 to 15.9 lb in)	M5	2.2 N m (19.5 lb in)
4200-3233	16 mm² (AWG 6)	1.5 to 1.8 N m (13.3 to 15.9 lb in)	M6	4 N m (35.4 lb in)
4200-5833	16 mm² (AWG 6)	1.5 to 1.8 N m (13.3 to 15.9 lb in)	M5	2.2 N m (19.5 lb in)
4200-5534	35 mm² (AWG 2)	4 to 4.5 N m (35.4 to 39.8 lb in)	M6	4 N m (35.4 lb in)
4200-7534	35 mm² (AWG 2)	4 to 4.5 N m (35.4 to 39.8 lb in)	M6	4 N m (35.4 lb in)
4200-0035	50 mm² (AWG 1/0)	7 to 8 N m (62 to 70.8 lb in)	M10	15 to 17 N m (132.9 to 150.6 lb in)

3.18 Terminal size and torque settings

Table 3-10 Drive control terminal type

Model	Connection type
All	Spring terminals

Table 3-11 Drive control terminal data

Terminals	Max cable size	Min cable size	Recommended torque*
Control terminals	1.5mm² (16 AWG)**	0.2 mm² (24 AWG)	
+24 V supply connector	6 mm² (10 AWG)	0.5 mm² (20 AWG)	0.5 N m (4.4 lb in)

* Torque tolerance = 10 %.

** 2 x 0.75 mm² (18 AWG) with twin entry ferrule (two cable connection into a single terminal)

Table 3-12 Drive power terminal data

Model size	Terminal block description	Max cable size	Min cable size	Recommended torque*
All	AC power terminal connector	6 mm^2 (8 AWG)	0.5 mm^2 (20 AWG)	0.7 N m (6.2 lb in)
	Motor power terminal connector	4 mm^2 (12 AWG)	0.5 mm^2 (20 AWG)	0.5 N m (4.4 lb in)
	Brake terminal connector	6 mm^2 (8 AWG)	0.5 mm^2 (20 AWG)	0.7 N m (6.2 lb in)
	DC busbar			2.0 N m (17.7 lb in)
	Ground busbar			2.0 N m (17.7 lb in)
	Internal EMC filter screw			0.8 N m (7.1 lb in)
	Compact brake resistor mounting screw			0.8 N m (7.1 lb in)
	Compact brake resistor thermistor screw			0.3 N m (2.7 lb in)

* Torque tolerance = 10 %.

Table 3-13 Drive power terminal data

Model size	Terminal block description	Max cable size	Min cable size	Recommended torque*
All	DC busbar			2.0 N m (17.7 lb in)
	Ground busbar			2.0 N m (17.7 lb in)

* Torque tolerance = 10 %.

3.19 Hand tools required with Digitax HD M75X Series

The following hand tools are required for the setting-up and installation of the drive.

- Torx screwdriver: Size T20.
- 2.5 mm flat blade terminal screwdriver.

3.20 Routine maintenance

The drive should be installed in a cool, clean, well ventilated location. Contact of moisture and dust with the drive should be prevented. The routine maintenance periods outlines in Table 3-14 are dependent upon drive environmental and operational conditions remaining within specifications.

Table 3-14 Recommended routine maintenance

Environment	Recommended action	Maintenance
Ambient temperature	Ensure enclosure temperature remains at or below maximum specified.	Annual inspection
Dust	Ensure the drive remains dust free - check that the drive and fan are not gathering dust. The lifetime of the fan is reduced in dusty environments. Accumulations of dust on the drive or fan assembly should be removed by vacuuming.	Annual inspection
Corrosion	Ensure the drive enclosure shows no signs of condensation or corrosion.	Annual inspection
Enclosure		
Enclosure door filters	Ensure filters are not blocked and that air is free to flow.	Annual inspection
Electrical		
Terminals	Ensure all screw, nut and crimp terminals remain tight - check for any discoloration which could indicate overheating.	Annual inspection
Cables	Check all cables for signs of damage.	Annual inspection
Cooling fan	Preventative maintenance check	Annual inspection. Replacement - 6 years

3.21 Fan replacement

WARNING

Electric shock risk
The AC and DC power supply must be disconnected from the drive using an approved isolation device before the fan assembly is removed.

Figure 3-30 Removal of frame size 1 and 2 cooling fan

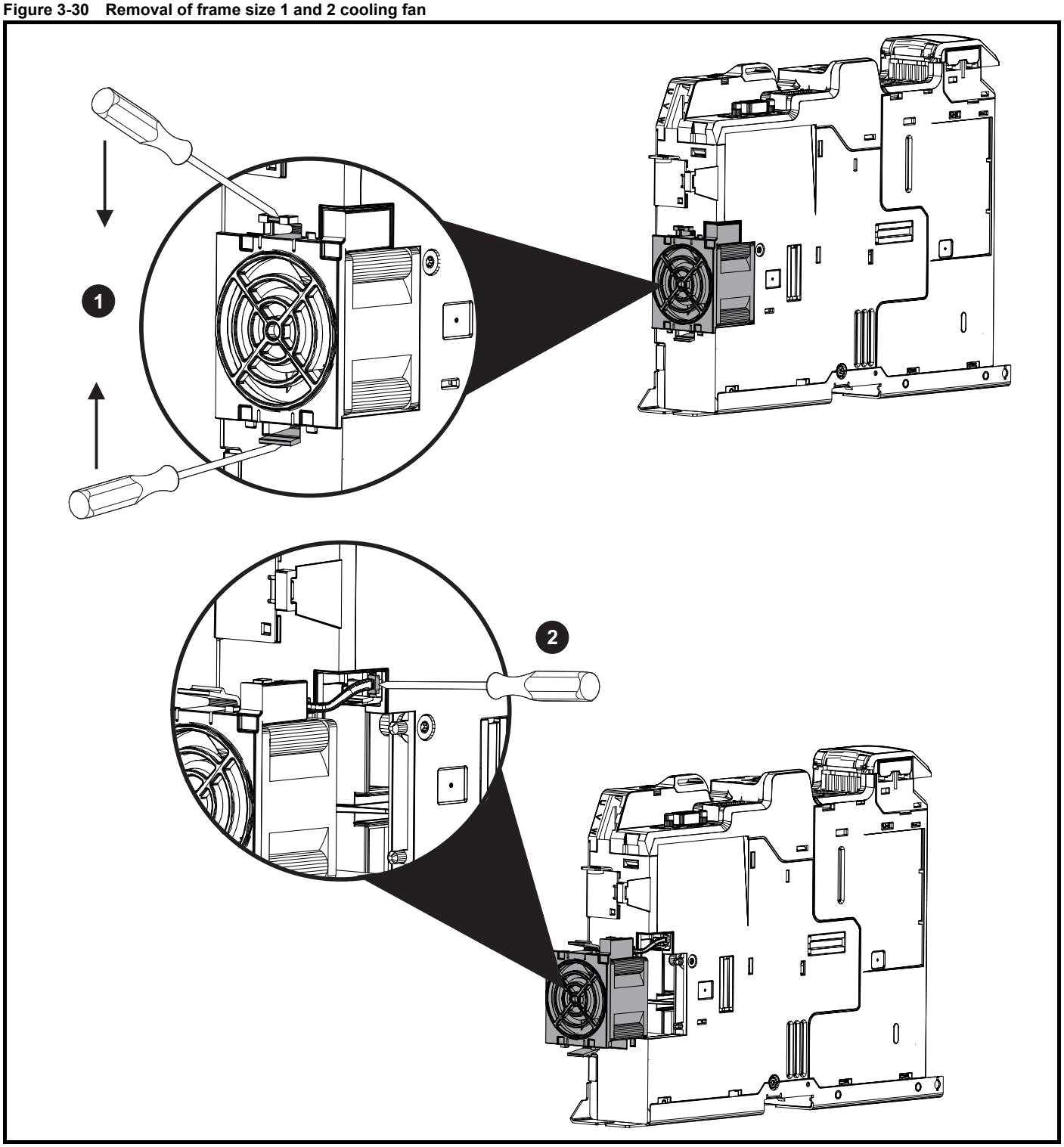

1. Using a flat bladed tool, press the two tabs inwards to release the fan from the drive frame.

2. Partly withdraw the fan assembly and prise out the two way fan plug from the connector. This should not be performed by pulling on the fan supply cable. Fully withdraw the fan from the housing.

NOTE

Accumulations of dust on the drive or fan assembly should be removed by vacuuming.

Figure 3-31 Re-fitting frame 1 and 2 cooling fan assembly

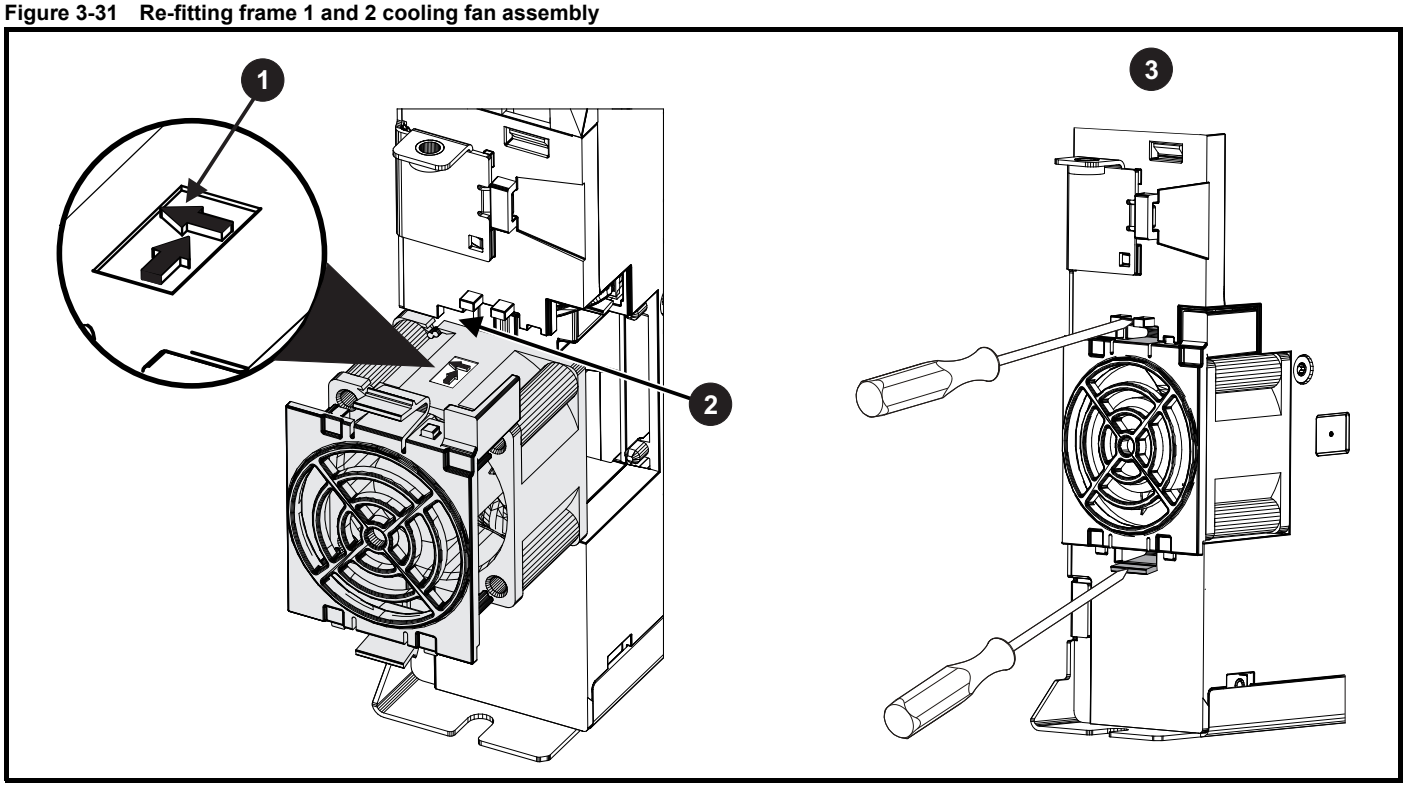

1. To ensure the fan is correctly orientated the airflow direction markings (on the fan) must be positioned as shown in Figure 3-31.

2. Position the fan supply cable so that it sits in the recess between the top of the fan assembly and the plastic housing of the drive.

3. Use a flat bladed tool to fully re-engage the clips into location by pushing on the end of the clips.

NOTE

Ensure clips are fully engaged in order to prevent air leakage.

Figure 3-32 Removal of frame size 3 cooling fan

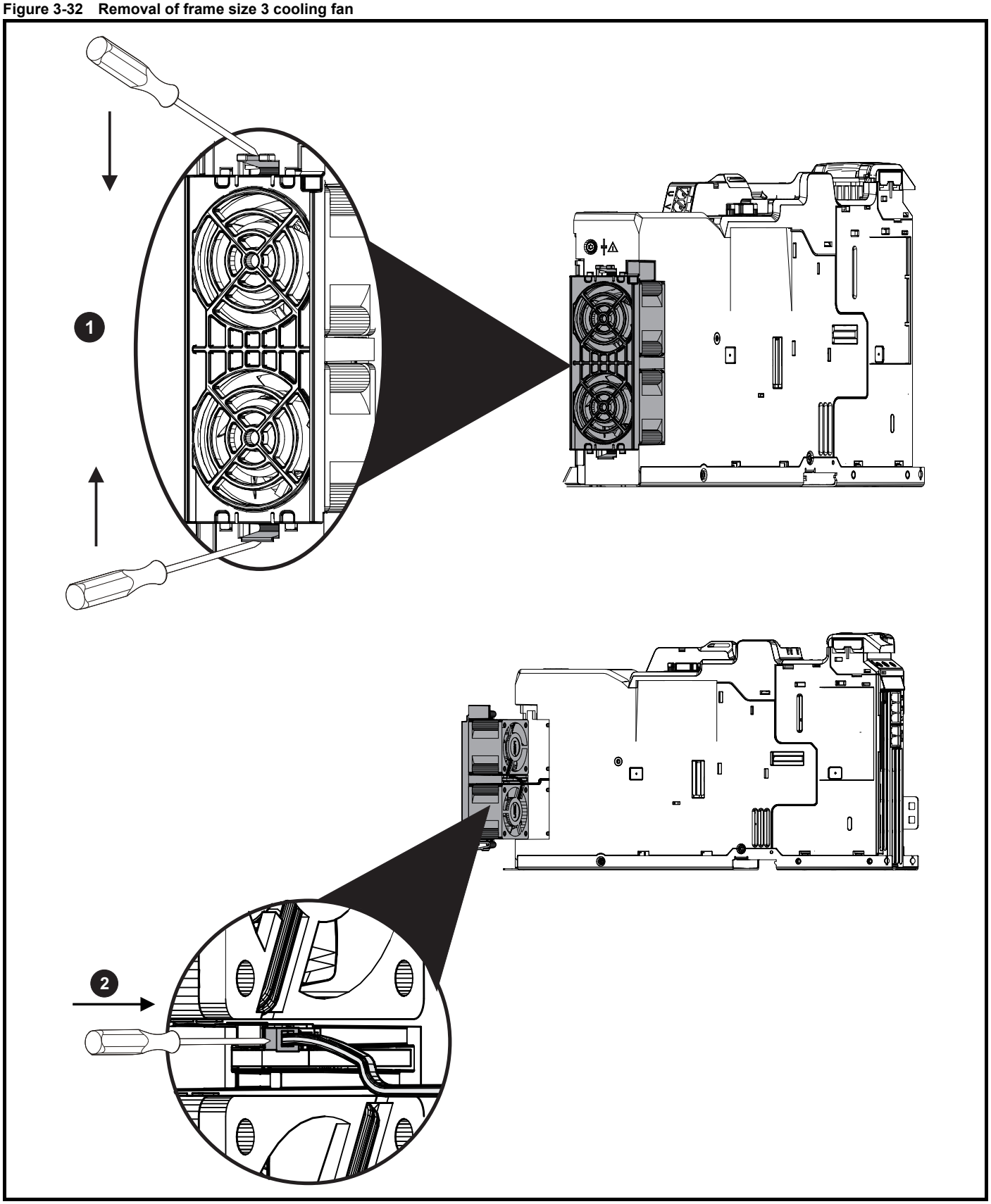

1. Using a flat bladed tool, press the two tabs inwards to release the fan from the drive frame.

2. Partly withdraw the fan assembly and prise out the two way fan plug from the connector. This should not be performed by pulling on the fan supply cable. Fully withdraw the fans from the housing.

NOTE

Accumulations of dust on the drive or fan assembly should be removed by vacuuming.

Figure 3-33 Re-fitting frame 3 cooling fan assembly

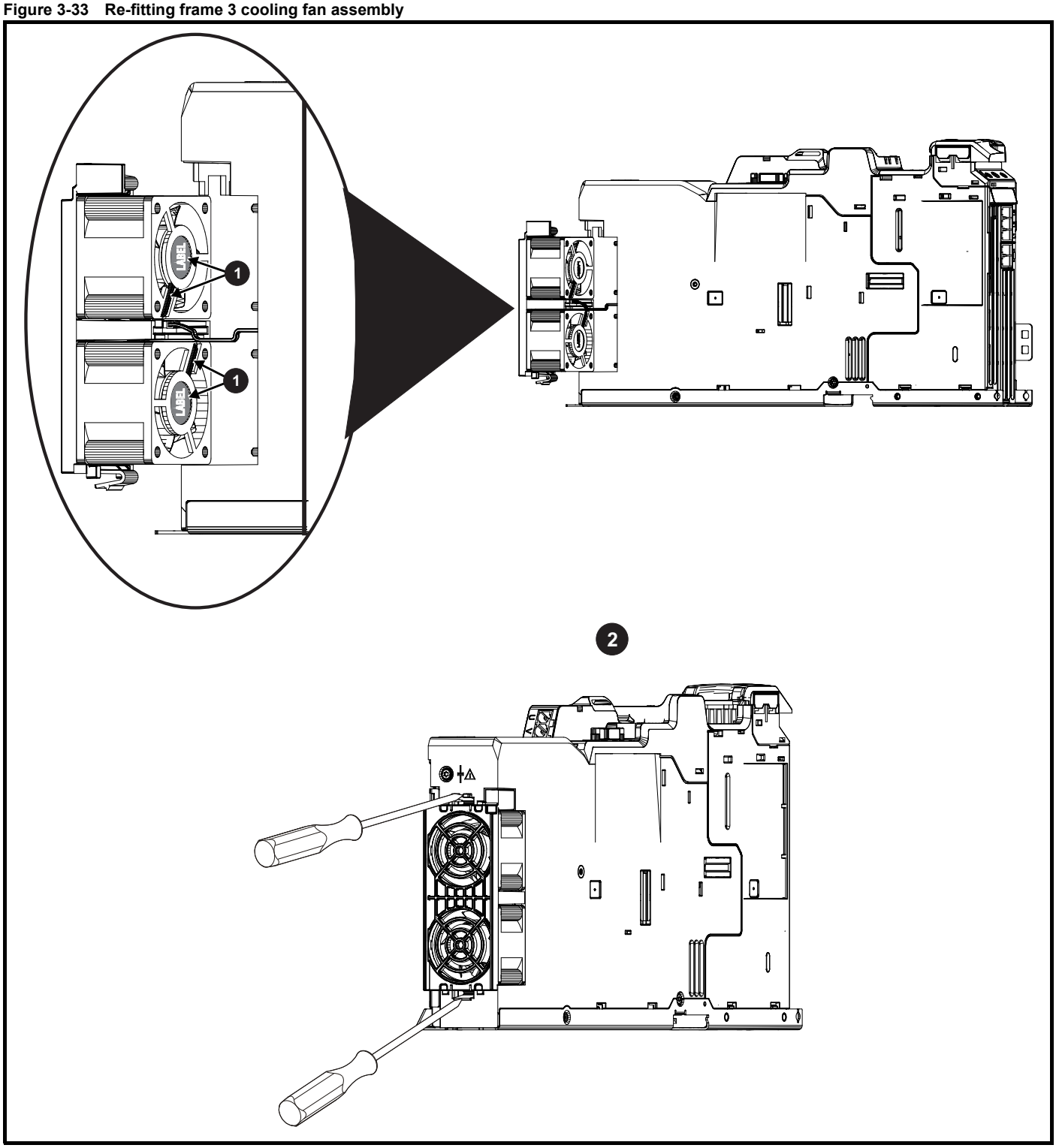

1. For correct orientation, position the fans with the adhesive label and supply cables as shown in Figure 3-33.

2. Use a flat blade tool to fully re-engage the clips into location by pushing on the end of the clips.

Table 3-15 Fan replacement kit

Model	Fan part number
Frame size 1 and 2 fan kit	9500-1053
Frame size 3 fan kit	9500-1054

4 Electrical installation



Electric shock risk
The voltages present in the following locations can cause severe electric shock and may be lethal:
- AC supply cables and connections
- DC and brake cables, and connections
- Output cables and connections
- Many internal parts of the drive, and external option units



Isolation device
The AC and/or DC power supply must be disconnected from the drive using an approved isolation device before any cover is removed from the drive or before any servicing work is performed.



STOP function
The STOP function does not remove dangerous voltages from the drive, the motor or any external option units.



Safe Torque Off function
The Safe Torque Off function does not remove dangerous voltages from the drive, the motor or any external option units.



Stored charge
The drive contains capacitors that remain charged to a potentially lethal voltage after the AC and/or DC power supply has been disconnected. If the drive has been energized, the AC and/or DC power supply must be isolated at least ten minutes before work may continue. Normally, the capacitors are discharged by an internal resistor. Under certain, unusual fault conditions, it is possible that the capacitors may fail to discharge, or be prevented from being discharged by a voltage applied to the output terminals.



Equipment supplied by plug and socket
Special attention must be given if the drive is installed in equipment which is connected to the AC supply by a plug and socket. The AC supply terminals of the drive are connected to the internal capacitors through rectifier diodes which are not intended to give safety isolation. If the plug terminals can be touched when the plug is disconnected from the socket, a means of automatically isolating the plug from the drive must be used (e.g. a latching relay).



Permanent magnet motors
Permanent magnet motors generate electrical power if they are rotated, even when the supply to the drive is disconnected. If that happens then the drive will become energized through its motor terminals. If the motor load is capable of rotating the motor when the supply is disconnected, then the motor must be isolated from the drive before gaining access to any live parts.



0V control connections on all frame sizes are internally earthed and cannot be disconnected. Ensure that there is adequate equipotential bonding between parts of a system with interconnected control wiring.

4.1 Power and ground connections

4.1.1 Drive power and ground connections

Figure 4-1 Digitax HD M75X power and ground connections

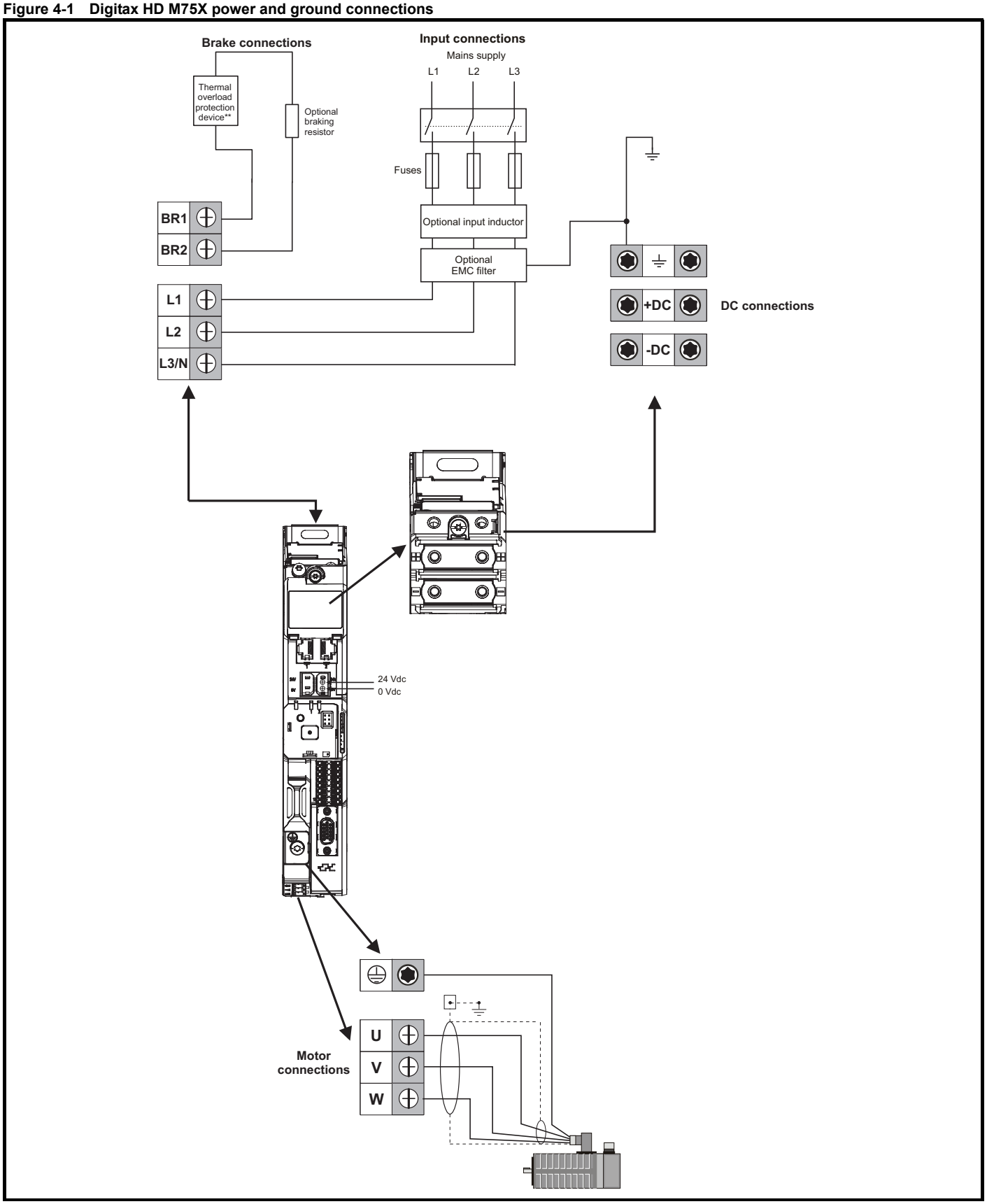

4.1.2 Capacitor module power and ground connections

Figure 4-2 Digitax HD M75C Capacitor Module power and ground connections

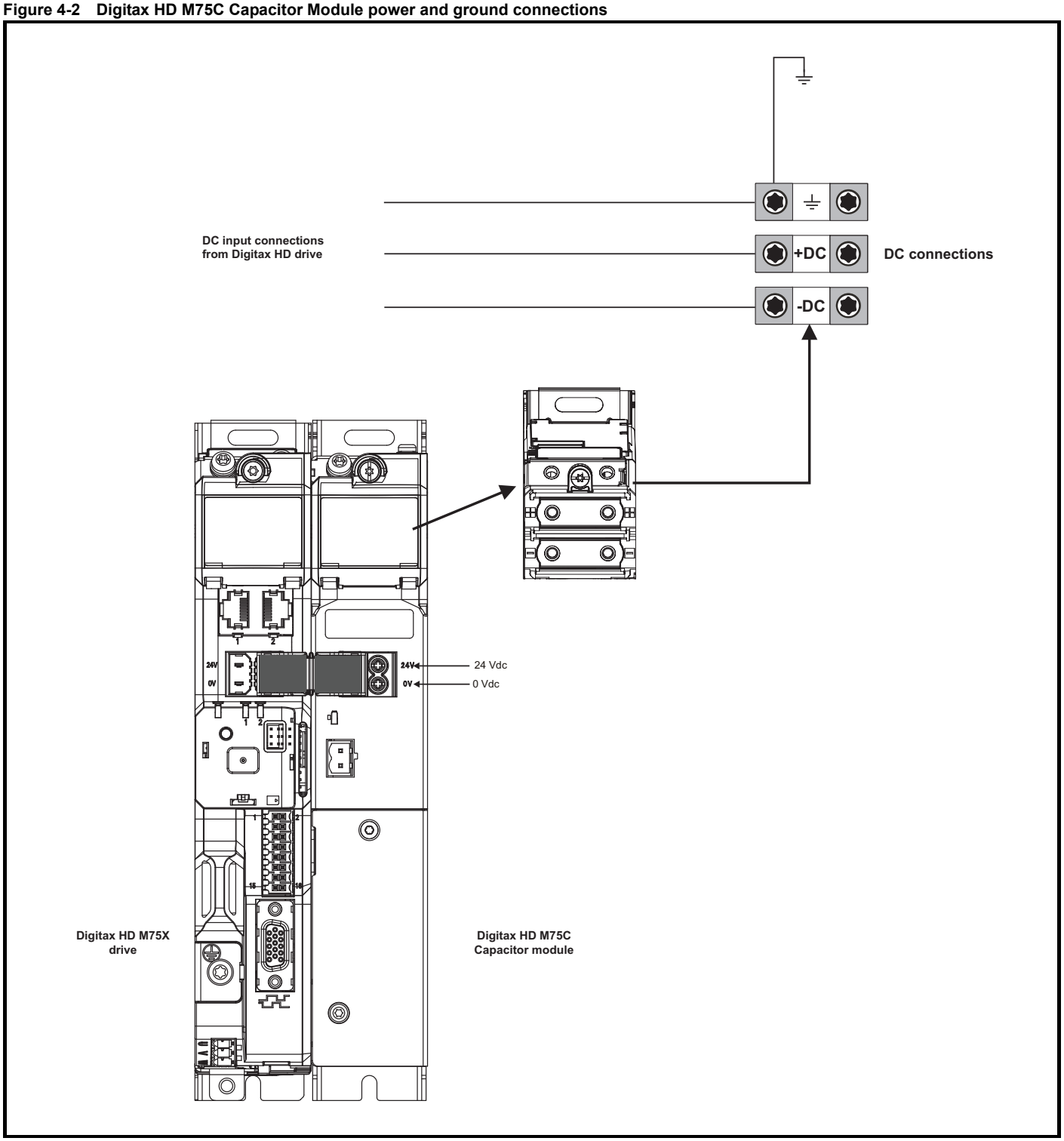

4.1.3 Ground connections

The drive must be connected to the system ground of the supply. The ground wiring must conform to local regulations and codes of practice.

NOTE

For further information on ground cable sizes, refer to Table 4-1 below.

NOTE

The capacitor module can be fitted to either the left or right side of the drive.

Table 4-1 Protective ground cable ratings

Input phase conductor size	Minimum ground conductor size
≤ 10 mm²	Either 10 mm² or two conductors of the same cross-sectional area as the input phase conductor
> 10 mm² and ≤ 16 mm²	The same cross-sectional area as the input phase conductor

The supply and motor ground connections are made using the M4 threaded holes in the metal side plate of the drive. Connections are located at the top and bottom of the drive. See Figure 4-3 for details.

WARNING

The ground loop impedance must conform to the requirements of local safety regulations.
The drive must be grounded by a connection capable of carrying the prospective fault current until the protective device (fuse, etc). disconnects the AC supply.
The ground connections must be inspected and tested at appropriate intervals.

Figure 4-3 Supply and motor ground connections

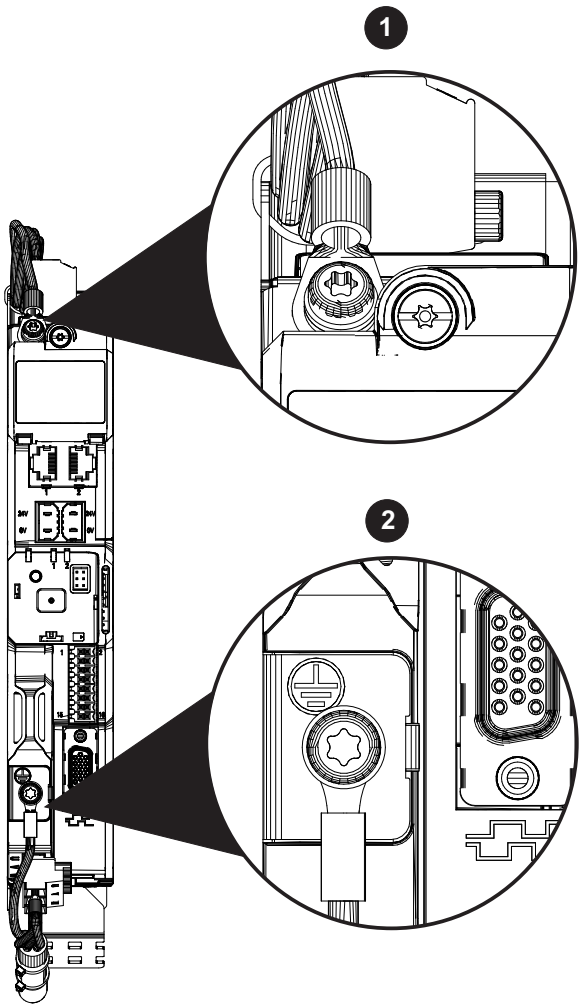

1. Supply ground connection.
2. Motor ground connection.

4.2 AC Supply requirements

AC supply voltage:
200 V drive: 200 V to 240 V ±10 %
400 V drive: 380 V to 480 V ±10 %

Number of phases: 1/3

Maximum supply imbalance: 2 % negative phase sequence (equivalent to 3 % voltage imbalance between phases).

Frequency range: 45 to 66 Hz

Table 4-2 Supply fault current used to calculate maximum input currents

Model	Symmetrical fault level (kA)
All	100 kA

4.2.1 Supply types

Drives are suitable for use on the following supply types:

Table 4-3 AC supply configuration suitability

AC supply configuration	Supply type	230 V	400 V
Star (Y) connected supply	Any TN, TT or neutral grounded	Permitted	Permitted
	IT (floating supply)	Permitted	Permitted
Delta connected supply	Any TN, TT or corner grounded	Permitted	Not permitted
	IT (floating supply)	Permitted	Not permitted
	Centre grounded	Not permitted	Not permitted
	Corner grounded in regen mode	Not permitted	Not permitted

Drives are suitable for use on supplies of installation category III and lower, according to IEC 60664-1. This means they may be connected permanently to the supply at its origin in a building, but for outdoor installation additional over-voltage suppression (transient voltage surge suppression) must be provided to reduce category IV to category III.

WARNING

Operation with IT (ungrounded) supplies:
Special attention is required when using internal or external EMC filters with ungrounded supplies, because in the event of a ground (earth) fault in the motor circuit the drive may not trip and the filter could be over-stressed. In this case, either the filter must not be used (removed) or additional independent motor ground fault protection must be provided. Refer to Table 4-3. For instructions on removal, refer to section 4.10.3 *Internal EMC filter* on page 74. For details of ground fault protection contact the supplier of the drive.

A ground fault in the supply has no effect in any case. If the motor must continue to run with a ground fault in its own circuit then an input isolating transformer must be provided and if an EMC filter is required it must be located in the primary circuit.

Unusual hazards can occur on ungrounded supplies with more than one source, for example on ships. Contact the supplier of the drive for more information.

4.2.2 Input inductors

Input inductors reduce the risk of damage to the drive resulting from poor phase balance or severe disturbances on the supply network.

Where input inductors are to be used, reactance values of approximately 2 % are recommended. Higher values may be used if necessary, but may result in a loss of drive output (reduced torque at high speed) because of the voltage drop.

For all drive ratings, 2 % input inductors permit drives to be used with a supply imbalance of up to 3.5 % negative phase sequence (equivalent to 5 % voltage imbalance between phases).

Severe disturbances may be caused by the following factors, for example:

- Power factor correction equipment connected close to the drive.
- Large DC drives having no or inadequate input inductors connected to the supply.
- Direct-on-line started motor(s) connected to the supply such that when any of these motors are started, the voltage dip exceeds 20 %.

Such disturbances may cause excessive peak currents to flow in the input power circuit of the drive. This may cause nuisance tripping, or in extreme cases, failure of the drive.

Drives of low power rating may also be susceptible to disturbance when connected to supplies with a high rated capacity.

When required, each drive must have its own input inductor. Three individual input inductors or a single three-phase inductor should be used.

Inductor current ratings

Continuous current:
Not less than the continuous input current rating of the drive

Repetitive peak current:
Not less than three times the continuous input current rating of the drive

4.2.3 Input inductor calculation

To calculate the inductance required (at **Y** %), use the following equation:

$$L = \frac{Y}{100} \times \frac{V}{\sqrt{3}} \times \frac{1}{2\pi f I}$$

Where:

I = drive rated input current (A)
L = inductance (H)
f = supply frequency (Hz)
V = voltage between lines

4.3 Supplying the drive and capacitor module with DC

All drive sizes have the option to be powered from an external DC power supply. Refer to section 4.1.1 *Drive power and ground connections* and section 4.1.2 *Capacitor module power and ground connections* on page 56/53 to identify the location of DC supply connections.

4.3.1 DC terminal cover access/removal

WARNING

Isolation device
The AC and DC power supply must be disconnected from the drive using an approved isolation device before any cover is removed from the drive or before any servicing work is performed.

WARNING

Stored charge
The drive contains capacitors that remain charged to a potentially lethal voltage after the AC and/or DC power supply has been disconnected. If the drive has been energized, the power supply must be isolated at least ten minutes before work may continue.

Normally, the capacitors are discharged by an internal resistor. Under certain, unusual fault conditions, it is possible that the capacitors may fail to discharge, or be prevented from being discharged by a voltage applied to the output terminals.

The DC supply connections are located under the DC terminal cover.

Figure 4-4 Location of the DC terminal cover (frame 1, 2 and 3)

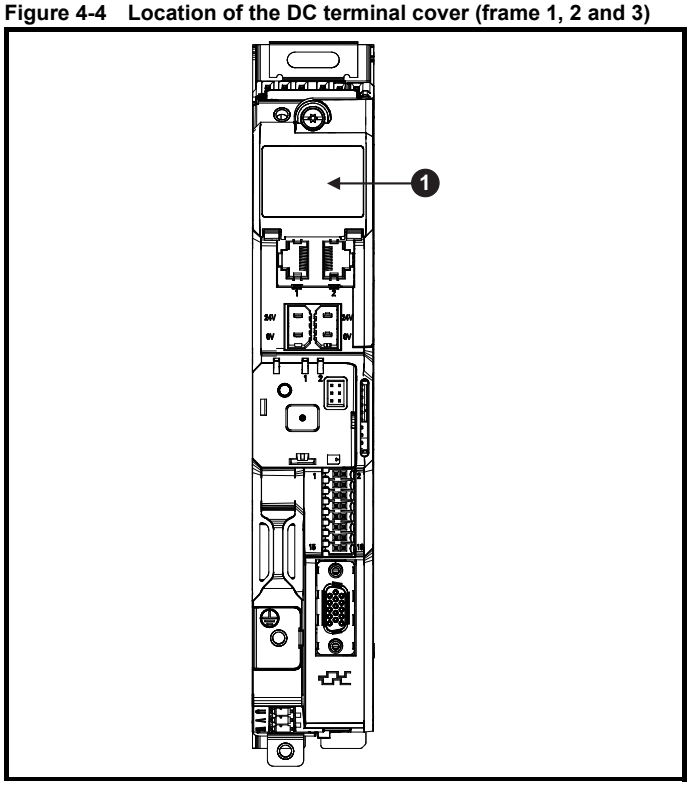

1. DC terminal cover.

Figure 4-5 Opening of the DC terminal cover (frame 1, 2 and 3)

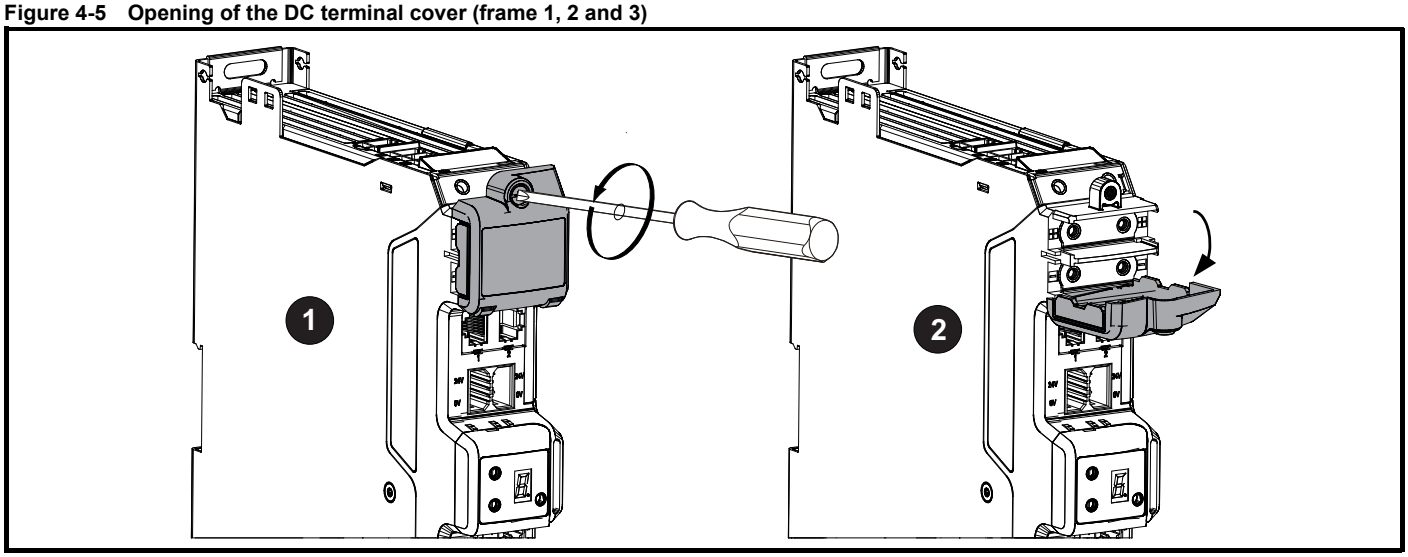

1. Undo the Torx screw.

2. The DC cover can then be hinged downwards or removed.

When replacing the terminal covers, the M3 screw should be tightened to a torque of 1 N m.

4.3.2 DC busbar cable connection

Cable connections to the DC terminals should be made with a suitably insulated M4 ring crimp (up to maximum 6 mm^2 cable).

Figure 4-6 DC supply connections and cable routing

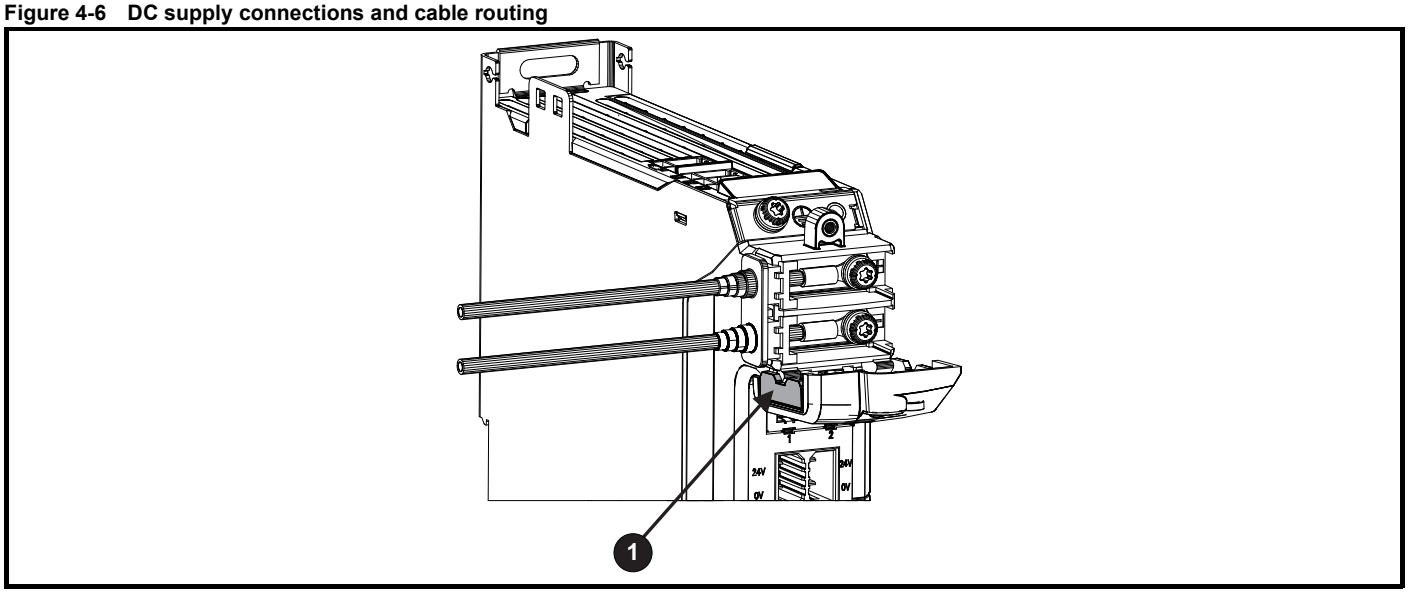

- Remove only one DC terminal cover breakout tab (**1**) when supplying a standalone drive. To remove the tab, cut either side with wire cutters before twisting back and forth. Remove any flash/sharp edges once the breakout tab is removed.

WARNING

DC cable grommets must be fitted when DC terminal cover breakout tabs are removed. Suitable grommets are available from the supplier of the drive. Refer to section 2.10.1 *Installation and system accessory kits available with Digitax HD M75X series* on page 16.

NOTE

For DC connection using 6 mm² - 16 mm² cable, a DC bus cable connection kit must be used. Refer to Figure 5-6 on page 107.

NOTE

DC supply connection (with up to 6 mm² cable) can be made from either the right or left hand side of the drive. Larger cables that use the External DC Cable Connection kit should be fitted to the left-hand side of the drive when an SI-Option Mounting kit is fitted.

NOTE

It is possible to use the capacitor module in conjunction with drives other than Digitax HD. Where this is the case and cables are used to connect to the DC terminals, the cable size should be the same size as the input cable of the connected drive.

4.4 External 24 Vdc supply

WARNING

The drive will power down and reset if the external 24 Vdc is removed.

An external 24 Vdc supply is required to power all the low voltage requirements within the drive.

The cable length between the 24 Vdc power supply and the drive should not exceed 10 m.

The 0V connection of the external 24 Vdc power supply should be connected to the same ground connection as the drive. Where this is not possible the 0V connection of the 24 Vdc power supply should be floating.

The working voltage range of the drive 24 V power circuit is as follow:

Table 4-4 Working voltage range of the 24 Vdc supply

All frame sizes	
Nominal operating voltage	24.0 Vdc
Minimum continuous operating voltage	20.4 V
Maximum continuous operating voltage	28.8 V
Minimum start up voltage	20.4 V
Maximum fuse rating	30 A

Table 4-5 24 Vdc typical input current and power requirements

Model / Option / Feature	Frame size	Typical input current (mA) @ 24 V	Typical input power (W)
Digitax HD M75X drive module*	1, 2	894	21.5
	3	1039	25
Digitax HD M75C Capacitor Module	All	240	4.9
SI-option module	Per module	450	11
High current brake output	All	1200	28.8
KI-Compact display	All	10	0.24
KI-Remote LCD keypad	All	73	1.75

* Typical 24 Vdc input current demand with inverter in the run condition, encoder connection and cooling fan(s) at full speed

NOTE

During start up of the external 24 Vdc supply, allow for an additional 1 A for 300 ms.

Figure 4-7 Location of external 24 Vdc supply terminals

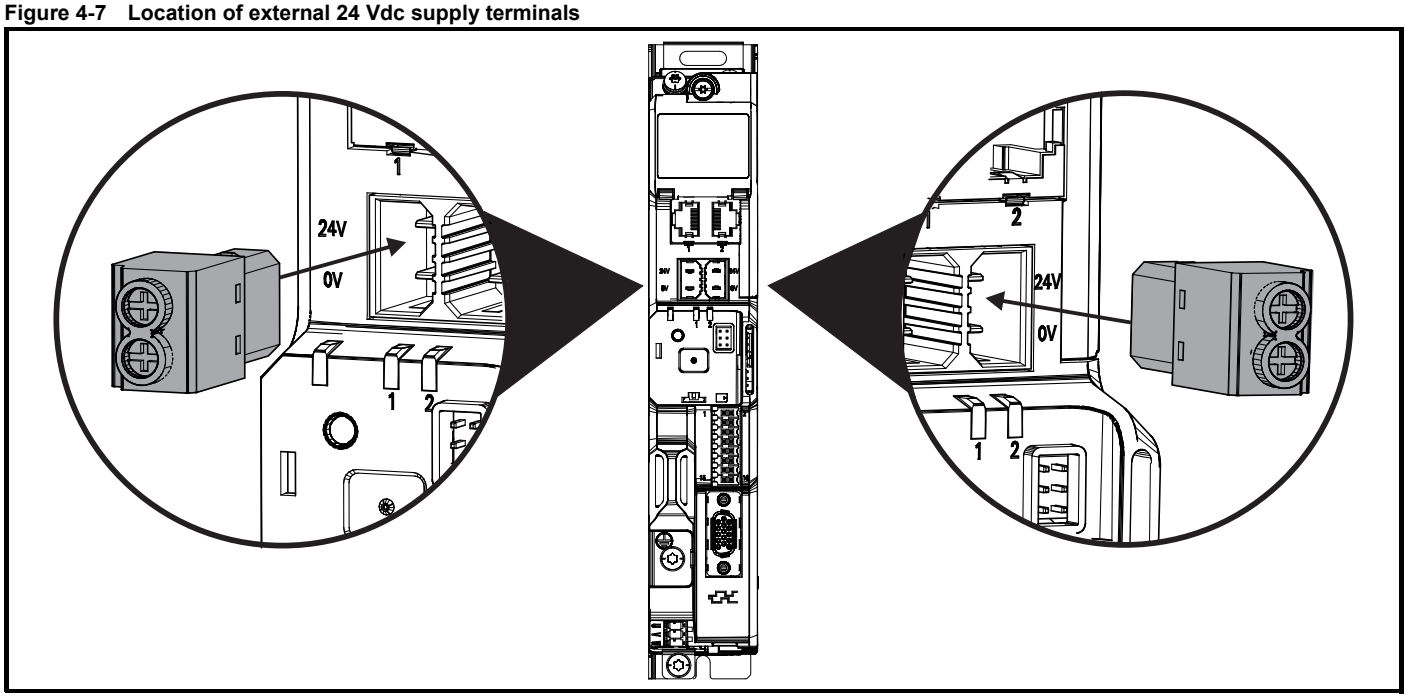

NOTE

The 24 Vdc supply connector has been designed to allow wiring from either the left or right hand side of the drive. The same plug should be used but attention is required to the polarity of the wiring. If it is reversed, the drive will not power up but will not be damaged.

For stand alone drives connection to either terminal is permissible.

4.5 Low voltage operation

The drive is able to operate from a low voltage DC supply with a range from 24 Vdc to the maximum DC volts. It is possible for the drive to go from operating on a normal line power supply voltage to operating on a much lower supply voltage without interruption.

Going from low voltage operation to normal mains operation requires the inrush current to be controlled. This may be provided externally. If not, the drive supply can be interrupted to utilise the normal soft starting method in the drive.

To fully exploit the new low voltage mode of operation, the under voltage trip level is now user programmable. For application data, contact the supplier of the drive.

The working voltage range of the low voltage DC power supply is as follows:

Minimum continuous operating voltage: 26 V
Minimum start up voltage: 32 V
Maximum over voltage trip threshold: 230 V drives: 415 V
400 V drives: 830 V

4.6 Ratings



WARNING

Fuses
The AC supply to the drive must be installed with suitable protection against overload and short-circuits. The following section shows recommended fuse ratings. Failure to observe this requirement will cause risk of fire.

Table 4-6 AC Fuse ratings and cable sizes for single axis circuit protection and short circuit current rating up to 5 kA

Model	No of input phases	Typical input current (for single axis)	Fuse ratings (for single axis)		Cable size (for single axis)			
					Input		Output	
		A	IEC gG	UL Class CC, J or T*	mm²	AWG	mm²	AWG
01200022	1	3.7	8	15	0.75	14	0.75	24
01200040	1	6.9	12	15	1.5	14	0.75	22
01200065	1	11.4	16	15	2.5	12	0.75	20
02200090	1	17.7	25	25	4.0	10	0.75	16
02200120	1	23.0	32	30	6.0	10	0.75	16
03200160	1	31.5	32	40	6.0	8	1.5	14
01200022	3	5.8	8	15	0.75	14	0.75	20
01200040	3	7.9	12	15	1.5	14	0.75	18
01200065	3	10.5	16	15	2.5	14	0.75	16
02200090	3	16.7	25	25	4.0	10	1.0	14
02200120	3	20.3	32	30	6.0	10	1.5	12
03200160	3	27.9	32	40	6.0	8	2.5	12
01400015	3	3.1	6	15	0.75	14	0.75	20
01400030	3	4.8	8	15	0.75	14	0.75	20
01400042	3	5.3	8	15	0.75	14	0.75	18
02400060	3	10.1	16	25	2.5	14	0.75	16
02400080	3	12.1	16	25	2.5	12	0.75	14
02400105	3	14.9	20	25	4.0	12	1.5	14
03400135	3	20.8	32	30	6.0	10	2.5	12
03400160	3	22.0	32	30	6.0	10	2.5	12

***** These are fast acting fuses.

For multi-axis fuse and cable data refer to section 5 *Multi axis system design*.

NOTE

PVC insulated cable should be used.

NOTE

Cable sizes are from IEC60364-5-52:2001 table A.52.C with correction factor for 40 °C ambient of 0.87 (from table A52.14) for cable installation method B2 (multicore cable in conduit).

Cable size may be reduced if a different installation method is used, or if the ambient temperature is lower.

The recommended cable sizes above are only a guide. The mounting and grouping of cables affects their current-carrying capacity, in some cases smaller cables may be acceptable but in other cases a larger cable is required to avoid excessive temperature or voltage drop. Refer to local wiring regulations for the correct size of cables.

Use 105 °C (UL 75 °C temp rise) PVC-insulated cable with copper conductors having a suitable voltage rating, for the following power connections:

- AC supply (or external EMC filter) to drive.
- Drive to braking resistor.

Input cable sizes should generally be regarded as a minimum, since they have been selected for co-ordination with the recommended fuses.

The drive power terminals are designed for a maximum cable size of 10 mm² (8 AWG), (minimum 0.05 mm / 30 AWG). Where more than one cable per terminal is used the combined diameters should not exceed the maximum. The terminals are suitable for both solid and stranded wires.

An MCB (miniature circuit breaker) may be used in place of fuses under the following conditions:

- The fault-clearing capacity must be sufficient for the installation
- The I^2T rating of the MCB must be less than or equal to that of the fuse rating listed above.

A fuse or other protection must be included in all live connections to the AC supply.

For a parallel DC bus system the maximum AC input fusing is shown in Table 4-7.

For AC fuse ratings for single axis circuit protection and short circuit current rating up to 100 kA, refer to Table 4-7.

Table 4-7 Maximum AC input fusing

Model	Fuse rating	Fuse rating	Input cable size	
	IEC class gG	IEC class J	mm^2	AWG
All	63	63	6	8

Table 4-8 DC Fuse ratings

Model	DC fuse current rating (A)	Max clearing I^2t allowed for Amperage	DC voltage rating
1200022	8	0.030 kA²	415
1200040	15	0.19 kA²s	415
1200065	20	0.360 kA²s	415
2200090	25	0.48 kA²s	415
2200120	35	1.5 kA²s	415
3200160	40	1.5 kA²s	415
1400015	8	0.030 kA²s	830
1400030	12	0.12 kA²s	830
1400042	15	0.19 kA²s	830
2400060	20	0.360 kA²s	830
2400080	30	1.5 kA²s	830
2400105	35	1.5 kA²s	830
3400135	40	1.5 kA²s	830
3400160	40	1.5 kA²s	830

Table 4-9 Maximum DC input fusing

Model	DC fuse current rating (A)	Max clearing I^2t allowed for Amperage
All	63	3.08 kA²s

NOTE

Refer to Chapter 5 *Multi axis system design* on page 98 for further information regarding DC bus paralleling.

4.7 Output circuit and motor protection

The output circuit has fast-acting electronic short-circuit protection which limits the fault current to typically no more than five times the rated output current, and interrupts the current in approximately 20 µs. No additional short-circuit protection devices are required.

The drive provides overload protection for the motor and its cable. For this to be effective, *Rated Current* (**05.007**) must be set to suit the motor

WARNING

Rated Current (**05.007**) must be set correctly to avoid a risk of fire in the event of motor overload.

There is also provision for the use of a motor thermistor to prevent over-heating of the motor, e.g. due to loss of cooling.

4.7.1 Motor cable types

Since capacitance in the motor cable causes loading on the output of the drive, ensure the cable length does not exceed the values given in Table 4-10.

Cable sizes are given for guidance only and may be changed depending on the application and the method of installation of the cables.

The mounting and grouping of cables affect their current capacity, in some cases a larger cable is required to avoid excessive temperature or voltage drop.

NOTE

The recommended output cable sizes assume that the motor maximum current matches that of the drive. Where a motor of reduced rating is used the cable rating may be chosen to match that of the motor. To ensure that the motor and cable are protected against overload, the drive must be programmed with the correct motor rated current (Pr **05.007**).

- Cable lengths in excess of the specified values may be used only when special techniques are adopted; refer to the supplier of the drive.

Table 4-10 Motor cable size and maximum lengths

Model	Number of input phases	Output cable		All switching frequencies
		mm^2	AWG	
01200022	1	0.75	24	50 m
01200040	1	0.75	22	
01200065	1	0.75	20	
02200090	1	0.75	16	
02200120	1	0.75	16	
03200160	1	1.5	14	
01200022	3	0.75	20	50 m
01200040	3	0.75	18	
01200065	3	0.75	16	
02200090	3	1.0	14	
02200120	3	1.5	12	
03200160	3	2.5	12	
01400015	3	0.75	20	
01400030	3	0.75	20	
01400042	3	0.75	18	
02400060	3	0.75	16	
02400080	3	0.75	14	
02400105	3	1.5	14	
03400135	3	2.5	12	
03400160	3	2.5	12	

4.7.2 High-capacitance / reduced diameter cables

The maximum cable length is reduced from that shown in Table 4-10 if high capacitance or reduced diameter motor cables are used.

Most cables have an insulating jacket between the cores and the armor or shield; these cables have a low capacitance and are recommended. Cables that do not have an insulating jacket tend to have high capacitance; if a cable of this type is used, the maximum cable length is half that quoted in the tables, (Figure 4-8 shows how to identify the two types).

Figure 4-8 Cable construction influencing the capacitance

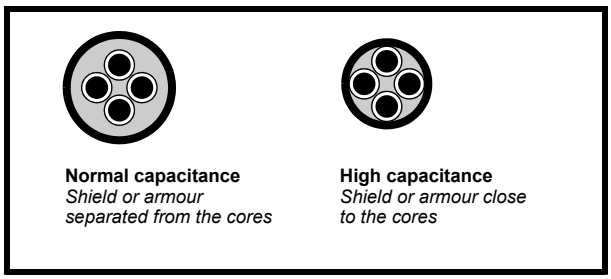

The maximum motor cable lengths specified in Table 4-10 are shielded and contain four cores. Typical capacitance for this type of cable is 130 pF/m (i.e. from one core to all others and the shield connected together).

4.7.3 Motor winding voltage

The PWM output voltage can adversely affect the inter-turn insulation in the motor. This is because of the high rate of change of voltage, in conjunction with the impedance of the motor cable and the distributed nature of the motor winding.

For normal operation with AC supplies up to 500 Vac and a standard motor with a good quality insulation system, there is no need for any special precautions. In case of doubt the motor supplier should be consulted. Special precautions are recommended under the following conditions, but only if the motor cable length exceeds 10 m:

- AC supply voltage exceeds 500 V
- DC supply voltage exceeds 670 V, i.e regenerative / AFE supply.
- Operation of 400 V drive with continuous or very frequent sustained braking
- Multiple motors connected to a single drive

It is recommended that an inverter-rated motor be used taking into account the voltage rating of the inverter. This has a reinforced insulation system intended by the manufacturer for repetitive fast-rising pulsed voltage operation.

If it is not practical to use an inverter-rated motor, an output choke (inductor) should be used. The recommended type is a simple iron-cored component with a reactance of about 2 %. The exact value is not critical. This operates in conjunction with the capacitance of the motor cable to increase the rise-time of the motor terminal voltage and prevent excessive electrical stress.

4.7.4 ⅄ / Δ motor operation

The voltage rating for ⅄ and Δ connections of the motor should always be checked before attempting to run the motor.

The default setting of the motor rated voltage parameter is the same as the drive rated voltage, i.e.

400 V drive 400 V rated voltage
230 V drive 230 V rated voltage

A typical 3 phase motor would be connected in ⅄ for 400 V operation or Δ for 230 V operation, however, variations on this are common e.g. ⅄ 690 V Δ 400 V. Incorrect connection of the windings will cause severe under or over fluxing of the motor, leading to a very poor output torque or motor saturation and overheating respectively.

4.7.5 Output contactor

WARNING

If the cable between the drive and the motor is to be interrupted by a contactor or circuit breaker, ensure that the drive is disabled before the contactor or circuit breaker is opened or closed. Severe arcing may occur if this circuit is interrupted with the motor running at high current and low speed.

A contactor is sometimes required to be installed between the drive and motor for safety purposes.

The recommended motor contactor is the AC3 type.

Switching of an output contactor should only occur when the output of the drive is disabled.

Opening or closing of the contactor with the drive enabled will lead to:

1. OI ac trips (which cannot be reset for 10 seconds)
2. High levels of radio frequency noise emission
3. Increased contactor wear and tear

The STO1, STO2 terminal when opened, provides a Safe Torque Off function. This can in many cases replace output contactors.

For further information see the relevant Digitax HD M75X *Control User Guide*.

4.8 Braking

Braking occurs when the drive is decelerating the motor, or is preventing the motor from gaining speed due to mechanical influences. During braking, energy is returned to the drive from the motor.

When motor braking is applied by the drive, the maximum regenerated power that the drive can absorb is equal to the power dissipation (losses) of the drive.

When the regenerated power is likely to exceed these losses, the DC bus voltage of the drive increases. Under default conditions, the drive brakes the motor under PI control, which extends the deceleration time as necessary in order to prevent the DC bus voltage from rising above a user defined set-point.

If the drive is expected to rapidly decelerate a load, or to hold back an overhauling load, a braking resistor must be installed.

Table 4-11 shows the default DC voltage level at which the drive turns on the braking transistor. However the braking resistor turn on and the turn off voltages are programmable with *Braking IGBT Lower Threshold* (06.073) and *Braking IGBT Upper Threshold* (06.074).

Table 4-11 Default braking transistor turn on voltage

Drive voltage rating	DC bus voltage level
200 V	390 V
400 V	780 V

NOTE
When a braking resistor is used, Pr **02.004** should be set to Fast ramp mode.

WARNING

High temperatures
Braking resistors can reach high temperatures. Locate braking resistors so that damage cannot result. Use cable having insulation capable of withstanding high temperatures.

4.8.1 Compact braking resistor

A resistor has been designed to be mounted on the side of the drive.

See section 3.16.1 *Compact braking resistor* on page 40 for mounting details. The design of the resistor is such that no thermal protection circuit is required, as the device will fail safely under fault conditions. The in built software overload protection is set-up at default for the designated compact resistor. The compact resistor is not supplied with the drive and can be purchased separately, refer to section 2.10.1 *Installation and system accessory kits available with Digitax HD M75X series* on page 16.

Side by side mounting is still permissible with compact braking resistor fitted.

Table 4-12 provides the compact braking resistor data.

NOTE
The compact resistor is suitable for applications with a low level of regenerative energy only.

CAUTION

Braking resistor overload protection parameter settings.
Failure to observe the following information may damage the resistor.
The drive software contains an overload protection function for a braking resistor, this function is enabled at default to protect the compact resistor. If the overload protection is disabled on the compact resistor and 50 W is exceeded, an OIBR trip will be generated. Below are the parameter settings.

Parameter		All frames	
		200 V drive	400 V drive
Braking resistor rated power	Pr **10.030**	50 W	
Braking resistor thermal time constant	Pr **10.031**	2 s	
Braking resistor resistance	Pr **10.061**	70 Ω	

For more information on the braking resistor software overload protection, see Pr **10.030**, Pr **10.031** and Pr **10.061** full descriptions in the relevant *Control User Guide*.

Table 4-12 Compact braking resistor data

Parameter	All frames	
Part number	9500-1049	
DC resistance at 25 °C	70 Ω	
Peak instantaneous power over 1 ms at nominal resistance	200 V	400 V
	2.2 kW	8.7 kW
Average power over 60 s	50 W	

4.8.2 External braking resistor

Thermal protection
When an external braking resistor is used, it is essential that a thermal protection device is incorporated in the braking resistor circuit.

WARNING

When a braking resistor is to be mounted outside the enclosure, ensure that it is mounted in a ventilated metal housing that will perform the following functions:

- Prevent inadvertent contact with the resistor
- Allow adequate ventilation for the resistor

When compliance with EMC emission standards is required, external connection requires the cable to be armored or shielded, since it is not fully contained in a metal enclosure. See section 4.10 *EMC (Electromagnetic compatibility)* on page 70 for further details.

Internal connection does not require the cable to be armored or shielded.

Table 4-13 Minimum resistance values and peak power rating for the braking resistor at 40 °C (104 °F)

Model	Minimum resistance* (Pr 10.061)	Peak power rating	Continuous power rating (Maximum Pr 10.030 setting)	Maximum braking resistor thermal time constant (Pr 10.031)
	Ω	kW	kW	s
200 V				
01200022	25	6	2	2
01200040	25	6	2	2
01200065	25	6	2	2
02200090	13	11.1	3.7	2
02200120	13	11.1	3.7	2
03200160	10	15	5	2
400 V				
01400015	106	5.7	1.9	2
01400030	106	5.7	1.9	2
01400042	106	5.7	1.9	2
02400060	36	16.8	5.6	2
02400080	36	16.8	5.6	2
02400105	36	16.8	5.6	2
03400135	26	22.8	7.6	2
03400160	26	22.8	7.6	2

* Resistor tolerance: ±10 %. The minimum resistance specified are for stand-alone drive systems only. If the drive is to be used as part of a common DC bus system different values may be required. See *Braking resistor software overload protection* on page 69. The minimum resistance values specified in Table 4-13 do not apply to the compact brake resistor.

For high-inertia loads or under continuous braking, the continuous power dissipated in the braking resistor may be as high as the power rating of the drive. The total energy dissipated in the braking resistor is dependent on the amount of energy to be extracted from the load.

The instantaneous power rating refers to the short-term maximum power dissipated during the on intervals of the pulse width modulated braking control cycle. The braking resistor must be able to withstand this dissipation for short intervals (milliseconds). Higher resistance values require proportionately lower instantaneous power ratings.

In most applications, braking occurs only occasionally. This allows the continuous power rating of the braking resistor to be much lower than the power rating of the drive. It is therefore essential that the instantaneous power rating and energy rating of the braking resistor are sufficient for the most extreme braking duty that is likely to be encountered. Optimization of the braking resistor requires careful consideration of the braking duty.

Select a value of resistance for the braking resistor that is not less than the specified minimum resistance. Larger resistance values may give a cost saving. Braking capability will then be reduced, which could cause the drive to trip during braking if the value chosen is too large.

The following external brake resistors are available from the supplier of the drive for all frame sizes.

Table 4-14 External brake resistors (40 °C ambient) for all frame sizes

Part number	Part description	Ohmic value Pr 10.061	Continuous power rating Pr 10.030	Max instant power rating ton = 1 ms	Pulse power 1/120 s (ED 0.8 %)	Pulse power 5/120 s (ED 4.2 %)	Pulse power 10/120 s (ED 8.3 %)	Pulse power 40/120 s (ED 33 %)	Time constant Pr 10.031
1220-2201	DBR. 100 W, 20R, 130 x 68, TS	20 Ω	100 W	2.0 MW	2300 W	1000 W	650 W	250 W	2
1220-2401	DBR. 100 W, 40R, 130 x 68, TS	40 Ω	100 W	1.6 MW	1900 W	900 W	610 W	240 W	2
1220-2801	DBR. 100 W, 80R, 130 x 68, TS	80 Ω	100 W	1.25 MW	1500 W	775 W	570 W	230 W	2

External brake resistors will need to be combined meet the drive minimum resistance values as detailed in Table 4-13 *Minimum resistance values and peak power rating for the braking resistor at 40 °C (104 °F)*.

The thermal switch should be integrated in the control circuit by the user.

Pr **10.030**, Pr **10.031** and Pr **10.061** should be set as per information provided in Table 4-13. Refer to description of Pr **10.030**, Pr **10.031** and Pr **10.061** in section 4.8.3 *Braking resistor software overload protection* on page 69 for more information.

Thermal protection circuit for the braking resistor

The thermal protection circuit must disconnect the AC supply from the drive if the resistor becomes overloaded due to a fault. Figure 4-9 shows a typical circuit arrangement.

Figure 4-9 Typical protection circuit for a braking resistor

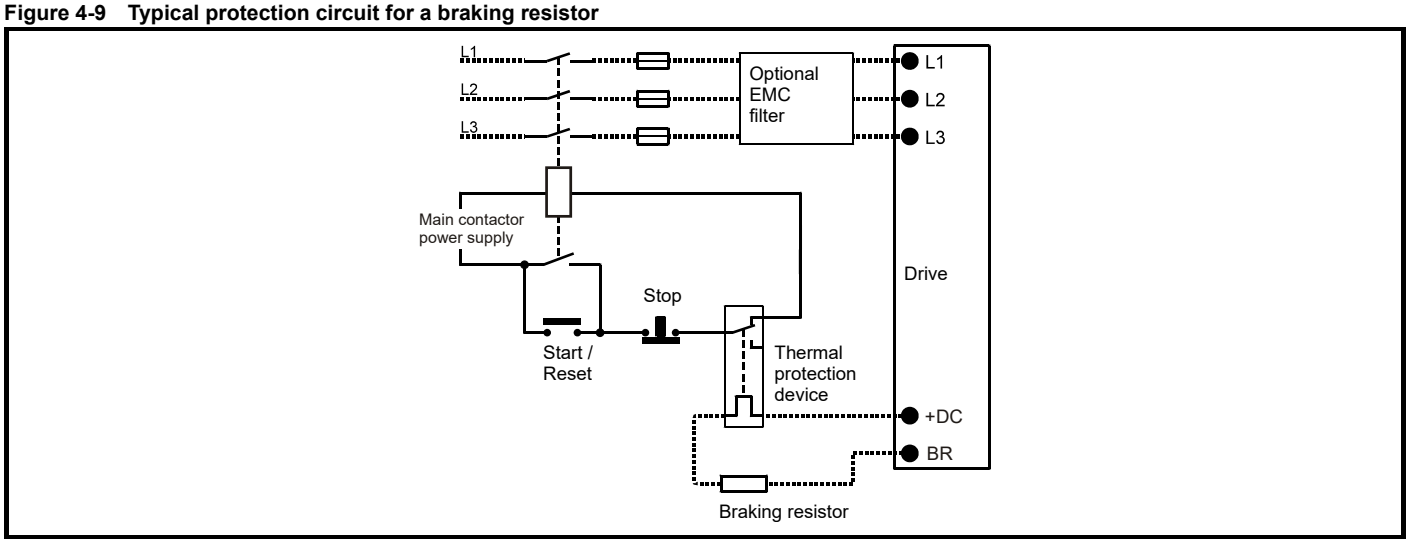

See Figure 4-1 on page 56 for the location of the +DC and braking resistor connections.

4.8.3 Braking resistor software overload protection

The drive software contains an overload protection function for a braking resistor. In order to enable and set-up this function, it is necessary to enter three values into the drive:

- *Braking Resistor Rated Power* (10.030)
- *Braking Resistor Thermal Time Constant* (10.031)
- *Braking Resistor Resistance* (10.061)

This data should be obtained from the manufacturer of the braking resistor.

The brake resistor thermal time constant (Pr **10.031**) is used to limit the energy dissipated in a resistor when braking overload energy. For the Digitax HD M75X drives, the brake resistor thermal time constant should be set to a maximum of 2 seconds. This will protect both the drive and the brake resistor from excessive temperatures. Full overload and continuous braking levels are achievable with this setting.

Pr **10.039** gives an indication of braking resistor temperature based on a simple thermal model. Zero indicates the resistor is close to ambient and 100 % is the maximum temperature the resistor can withstand. A 'Brake Resistor' alarm is given if this parameter is above 75 % and the braking IGBT is active. A Brake R Too Hot trip will occur if Pr **10.039** reaches 100 %, when Pr **10.037** is set to 0 (default value) or 1.

If Pr **10.037** is equal to 2 or 3, a Brake R Too Hot trip will not occur when Pr **10.039** reaches 100 %, but instead the braking IGBT will be disabled until Pr **10.039** falls below 95 %. This option is intended for applications with parallel connected DC buses where there are several braking resistors, each of which cannot withstand full DC bus voltage continuously. With this type of application it is unlikely the braking energy will be shared equally between the resistors because of voltage measurement tolerances within the individual drives. Therefore with Pr **10.037** set to 2 or 3, then as soon as a resistor has reached its maximum temperature the drive will disable the braking IGBT, and another resistor on another drive will take up the braking energy. Once Pr **10.039** has fallen below 95 % the drive will allow the braking IGBT to operate again.

See the *Parameter Reference Guide* for more information on Pr **10.030**, Pr **10.031**, Pr **10.037** and Pr **10.039**.

This software overload protection should be used in addition to an external overload protection device.

4.9 Ground leakage (PE current)

The ground leakage current depends upon whether the internal EMC filter is installed or not. The drive is supplied with the filter installed. Instructions for disconnecting the internal filter are given in section 4.10.3 *Internal EMC filter* on page 74.

Table 4-15 Ground leakage with and without Internal EMC filter installed

Drive	With internal EMC filter connected*	With internal EMC filter disconnected*
	mA	mA
M75X-0120022	7.7	2.8
M75X-0120040	7.7	2.8
M75X-0120065	7.7	2.8
M75X-0220090	10.9	8.9
M75X-0220120	10.9	8.9
M75X-0320160	8.1	1.6
M75X-0140015	13.9	4.4
M75X-0140035	13.9	4.4
M75X-0140042	13.9	4.4
M75X-0240060	16.5	6.8
M75X-0240080	16.5	6.8
M75X-0240105	16.5	6.8
M75X-0340135	16.3	3.8
M75X-0340160	16.3	3.8

* These are RMS values within a 1.5 kHz bandwidth measured with a configuration of 2 m SY cable connected to a common 4 pole motor cable at a switching frequency of 8 kHz having the motor frame only connected to the ground potential through the motor cable. Refer to the Digitax HD M75X series EMC data sheet, available from the supplier of the drive.



Leakage currents show levels in excess of the 3.5 mA limit. A permanent fixed, low impedance, low inductance ground connection between the drive's metal frame and PE must be provided, or other suitable measures taken to prevent a safety hazard occurring if the connection is lost.

4.9.1 Use of residual current device (RCD)

There are three common types of ELCB / RCD:

1. AC - detects AC fault currents
2. A - detects AC and pulsating DC fault currents (provided the DC current reaches zero at least once every half cycle)
3. B - detects AC, pulsating DC and smooth DC fault currents
   - Type AC should never be used with drives
   - Type A can only be used with single phase drives
   - Type B must be used with three phase drives



Only type B ELCB / RCD are suitable for use with 3 phase inverter drives.

If an external EMC filter is used, a delay of at least 50 ms should be incorporated to ensure spurious trips are not seen. The leakage current is likely to exceed the trip level if all of the phases are not energized simultaneously.

Ground leakage current will increase when operating on a single phase supply, it may be necessary therefore to disconnect the internal EMC filter to ensure spurious RCD trips are not seen. Instructions for disconnecting the Internal EMC filter are given in section 4.10.3 *Internal EMC filter* on page 74.

4.10 EMC (Electromagnetic compatibility)

The requirements for EMC are divided into three levels in the following three sections:

- section 4.10.4 *General requirements for EMC Ground (earth) connections*, this is for all applications, to ensure reliable operation of the drive and minimise the risk of disturbing nearby equipment. The immunity standards specified in section 4.10 *EMC (Electromagnetic compatibility)* on page 70 will be met, but no specific emission standards are applied.
- section 4.10.6 *Compliance with BS EN IEC 61800-3:2018 (standard for Power Drive Systems)*, Requirements for meeting the EMC standard for power drive systems.
- section 4.10.7 *Compliance with generic emission standards*, Requirements for meeting the generic emission standards for the industrial environment, BS EN 61000-6-4:2007+A12011 (IEC 61000-6-4:2006).

The recommendations of section 4.10.4 will usually be enough to avoid causing disturbance to adjacent equipment of industrial quality. If particularly sensitive equipment is to be used nearby, or in a non-industrial environment, then the recommendations of section 4.10.6 or section 4.10.7 should be followed to give reduced radio-frequency emission.

To ensure the installation meets the various emission standards described in:

- The EMC data sheet available from the supplier of the drive.
- The Declaration of Conformity at the front of this manual.
- Chapter 6 *Technical data* on page 117.

The correct external EMC filter must be used and all guidelines in section 4.10.4 *General requirements for EMC Ground (earth) connections* on page 76 and section 4.10.7 *Compliance with generic emission standards* on page 81 must be followed.

4.10.1 Optional external EMC filters

The external EMC filter details for the Digitax HD M75X drive series are provided in the Table 4-17.

Table 4-16 Drive and EMC filter cross reference

Model	Number of phases	Part number
200 V		
01200022	1	4200-3503
01200040	1	
01200065	1	
02200090	1	4200-5033
02200120	1	
03200160	1	4200-6034
01200022	3	4200-8744
01200040	3	4200-6002
01200065	3	4200-6001
02200090	3	4200-5833
02200120	3	4200-5833
03200160	3	4200-5833
400 V		
01400015 to 01400042	3	4200-8744
02400060 to 02400105	3	4200-1644
03400135 to 03400160	3	4200-5833

Table 4-17 External EMC filter ratings

Part number	Number of phases	Maximum continuous current		Maximum voltage rating		Power losses at rated current	IP rating	Weight		Operational leakage current	Worst case leakage current
		@40 °C	@50 °C	IEC	UL						
		A	A	V	V	W		kg	lb	mA	mA
4200-3503	1	30	27.3	250	250	6.1	20	0.7	1.5	5.4	10.8
4200-5033	1	55	50.1	250	250	9.9	20	1.2	2.6	11	22
4200-6034	1	65.7	60	250	250	5.5	20	1.8	4.0	3.4	6.8
4200-8744	3	7.7	7	480	480	3.8	20	0.5	1.1	33	178.2
4200-6002	3	11	10	480	480	10	20	1.2	2.64	16	90
4200-6001	3	17	15.5	250	250	13	20	1.2	2.64	8	50
4200-1644	3	17.5	16	480	480	6.1	20	0.8	1.76	33	178.2
4200-5833	3	32.9	30	480	480	11.8	20	1.2	2.64	33	178.2
4200-3233	3	46	42	480	480	15.7	20	1.4	3.1	33	178.2
4200-5534	3	60.2	55	480	480	25.9	20	2.0	4.4	33	178.2
4200-7534	3	82.2	75	480	480	32.2	20	2.7	6.0	33	178.2
4200-0035	3	109.5	100	480	480	34.5	20	4.3	9.5	33	178.2

For external EMC filter dimensions and terminal data refer to section 3.17 *External EMC filter* on page 44.



High ground leakage current
When an EMC filter is used, a permanent fixed ground connection must be provided which does not pass through a connector or flexible power cord. This includes the internal EMC filter.

NOTE

The installer of the drive is responsible for ensuring compliance with the EMC regulations that apply in the country in which the drive is to be used.

4.10.2 Grounding hardware

The drive is supplied with a cable screen bracket to facilitate EMC compliance. The bracket provides a convenient method for direct grounding of cable shields without the use of “pig-tails”. Cable shields can be bared and clamped to the cable screen bracket using metal clips or cable ties. Note that, where applicable, the shield must in all cases be continued through the cable screen bracket to the intended terminal on the drive, in accordance with the connection details for the specific signal.

- See Figure 4-11 for details on installing the cable screen bracket.

Figure 4-10 Attaching the cable screen bracket to the motor, feedback and control wiring (frame sizes 1 and 2)

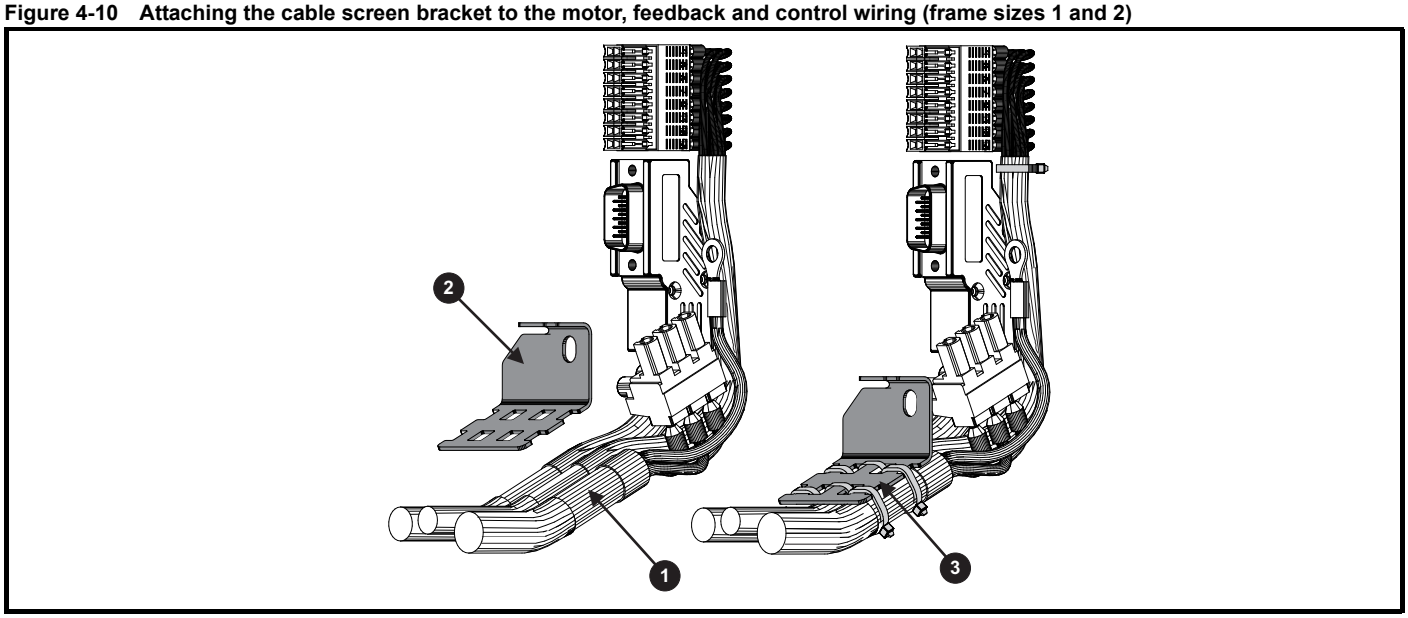

- Expose outer cable shields (**1**).
- The cable screen bracket (**2**) must be tie wrapped to the motor, feedback and control wiring (**3**).

Figure 4-11 Installation of cable screen bracket (frame sizes 1 and 2)

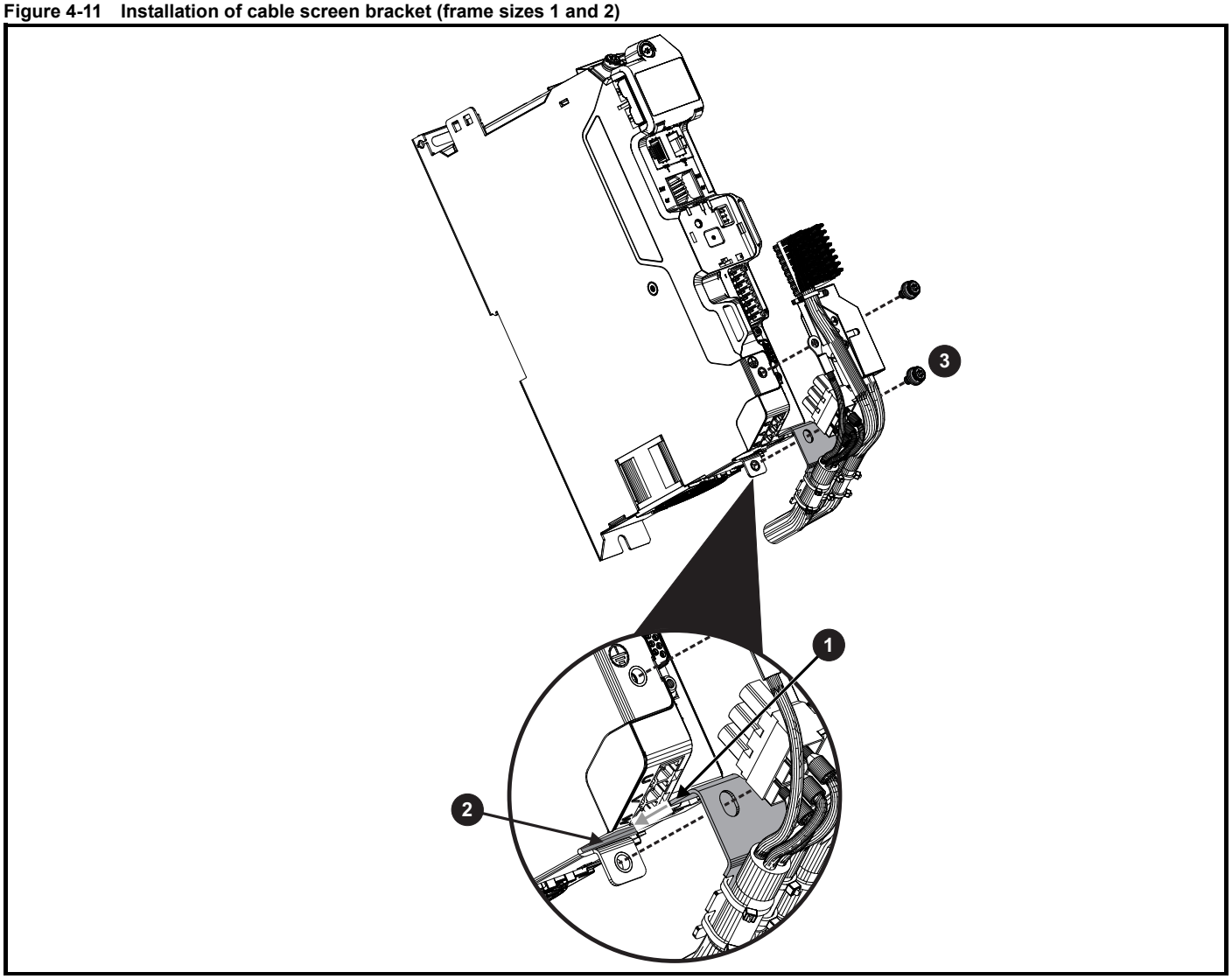

- Slide the tab on the cable screen bracket (**1**) into the slot formed in the metal side plate (**2**) and secure to the drive with M4 screw (**3**). Torque 2 N m.

Figure 4-12 Attaching the cable screen bracket to the motor, feedback and control wiring (frame size 3)

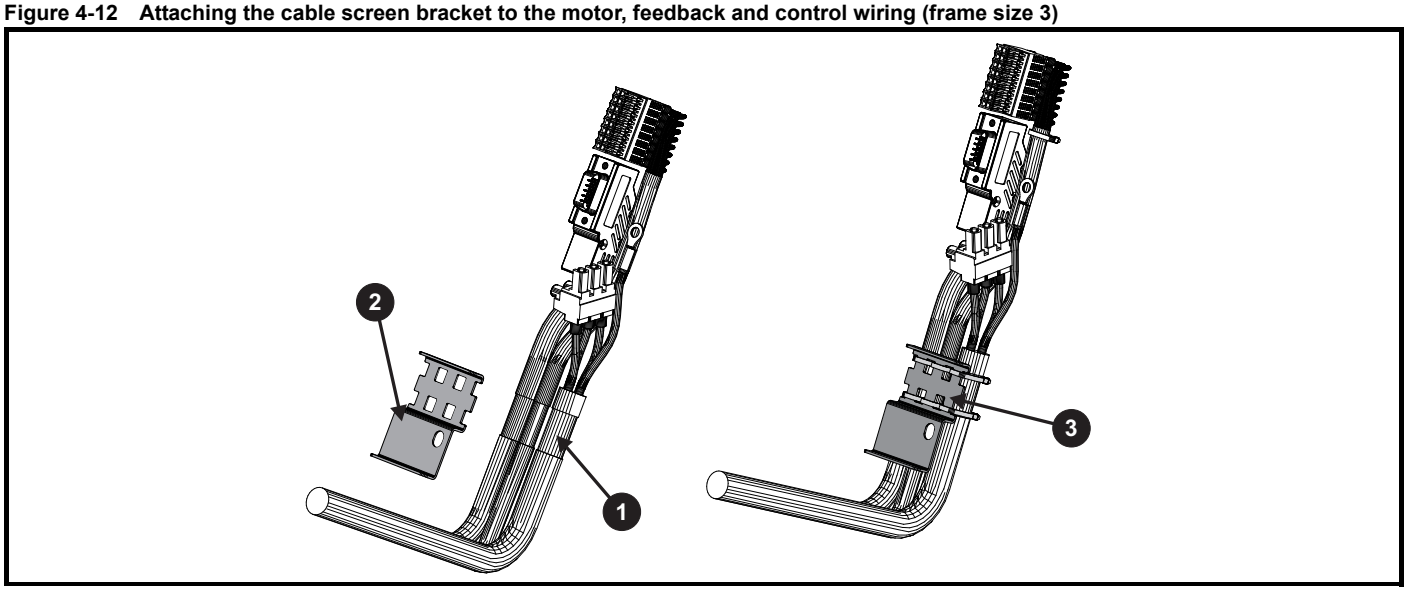

- Expose outer cable shields (**1**).
- The cable screen bracket (**2**) must be tie wrapped to the motor, feedback and control wiring (**3**).

Figure 4-13 Installation of cable screen bracket (frame size 3)

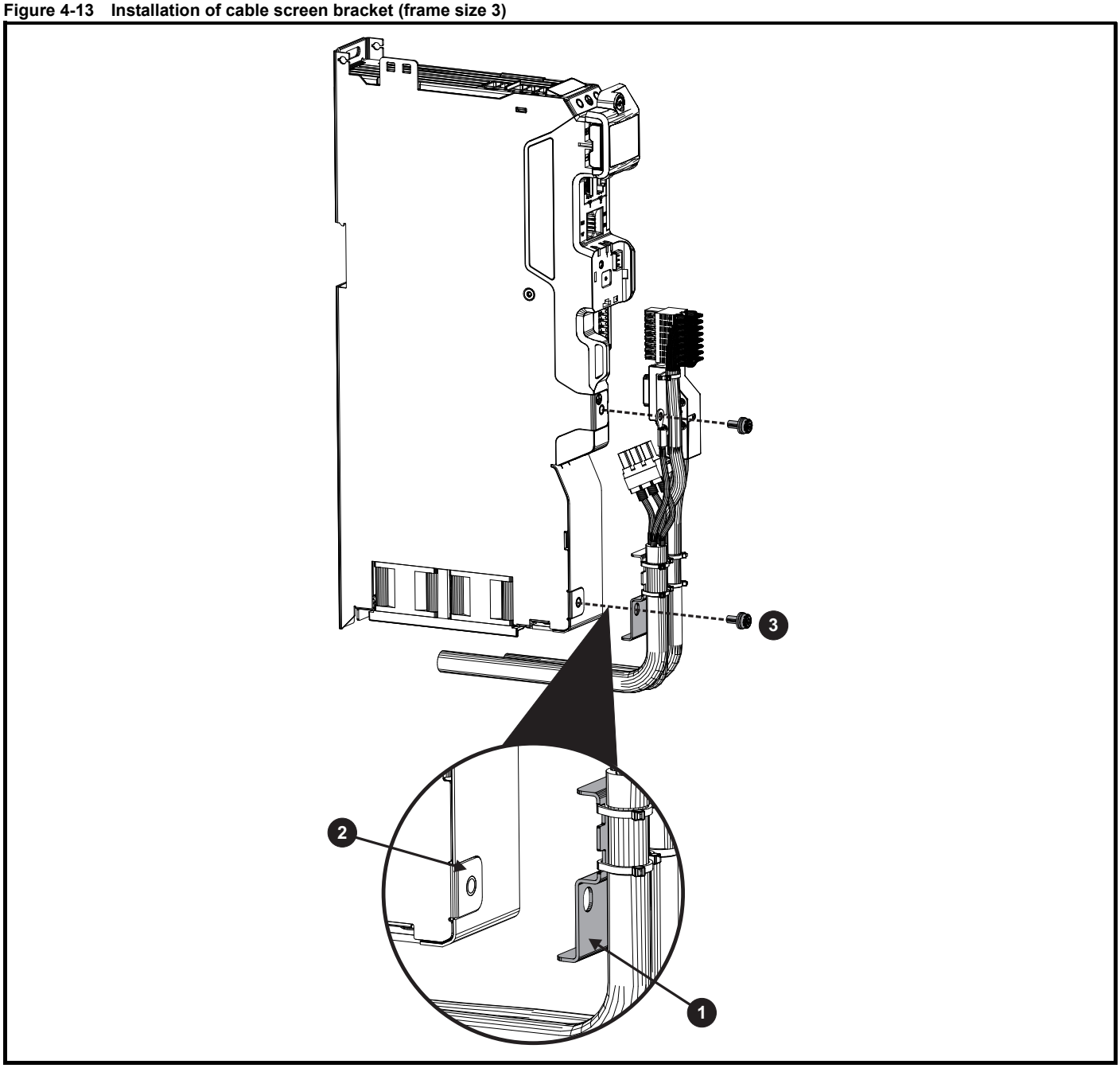

- Secure the cable screen bracket (**1**) to the tab on the metal side plate (**2**) with M4 screw (**3**). Torque 2 N m.

4.10.3 Internal EMC filter

It is recommended that the internal EMC filter be kept in place unless there is a specific reason for disconnecting it. On single phase supplies to prevent nuisance RCD tripping, it is recommended that the internal EMC filter be disconnected however.

The internal EMC filter reduces radio-frequency emissions into the line power supply. Where the motor cable is short, it permits the requirements of BS EN IEC 61800-3:2018 to be met for the second environment.

For longer motor cables, the filter continues to provide a useful reduction in emission level, and when used with any length of shielded cable up to the limit of the drive, it is unlikely that nearby industrial equipment will be disturbed. It is recommended that the filter be used in all applications unless the ground leakage current is unacceptable.

WARNING

The supply must be disconnected before disconnecting the internal EMC filter.

Figure 4-14 Disconnection of the internal EMC filter on Frame 1

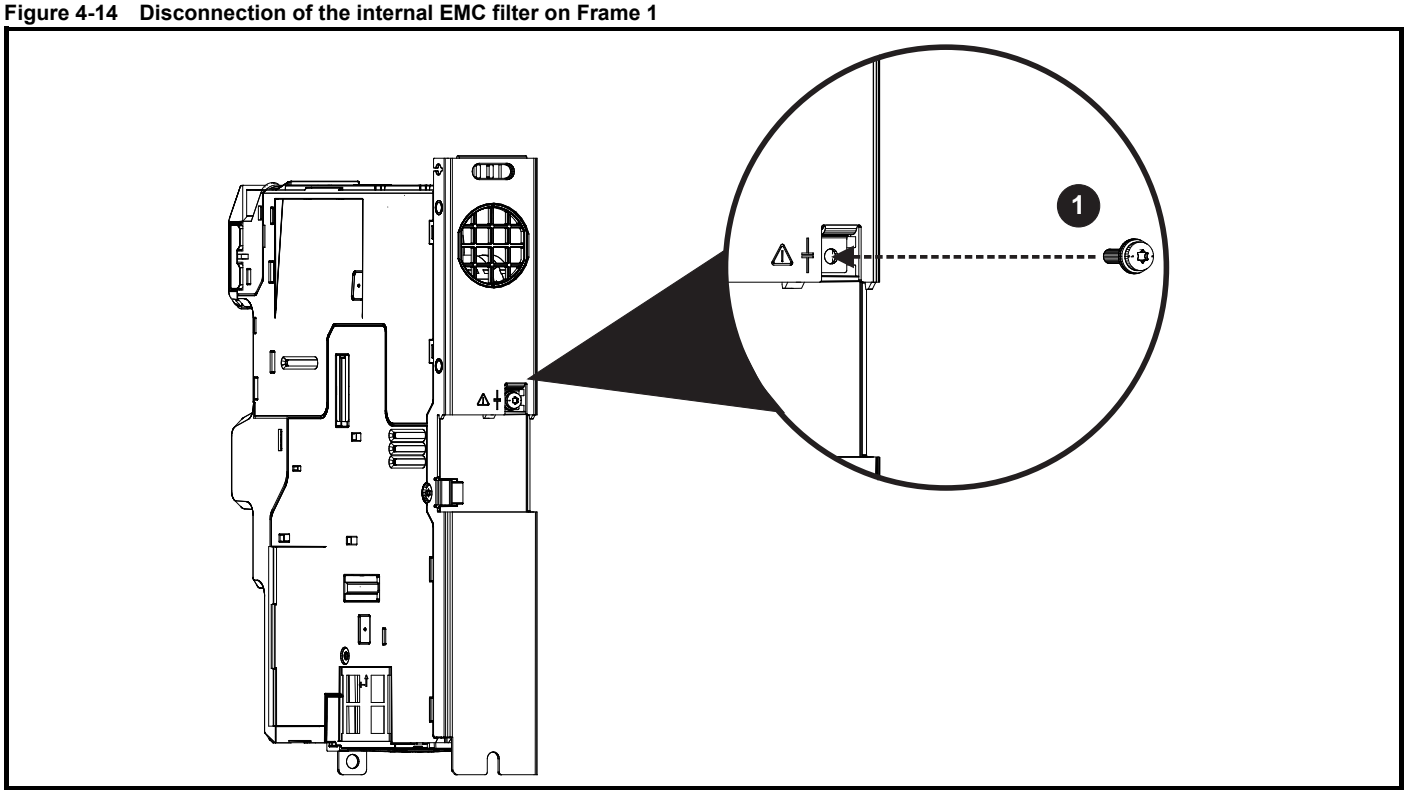

- To electrically disconnect the internal EMC filter, remove the screw (**1**) as shown above.

Figure 4-15 Disconnection of the internal EMC filter on Frame 2

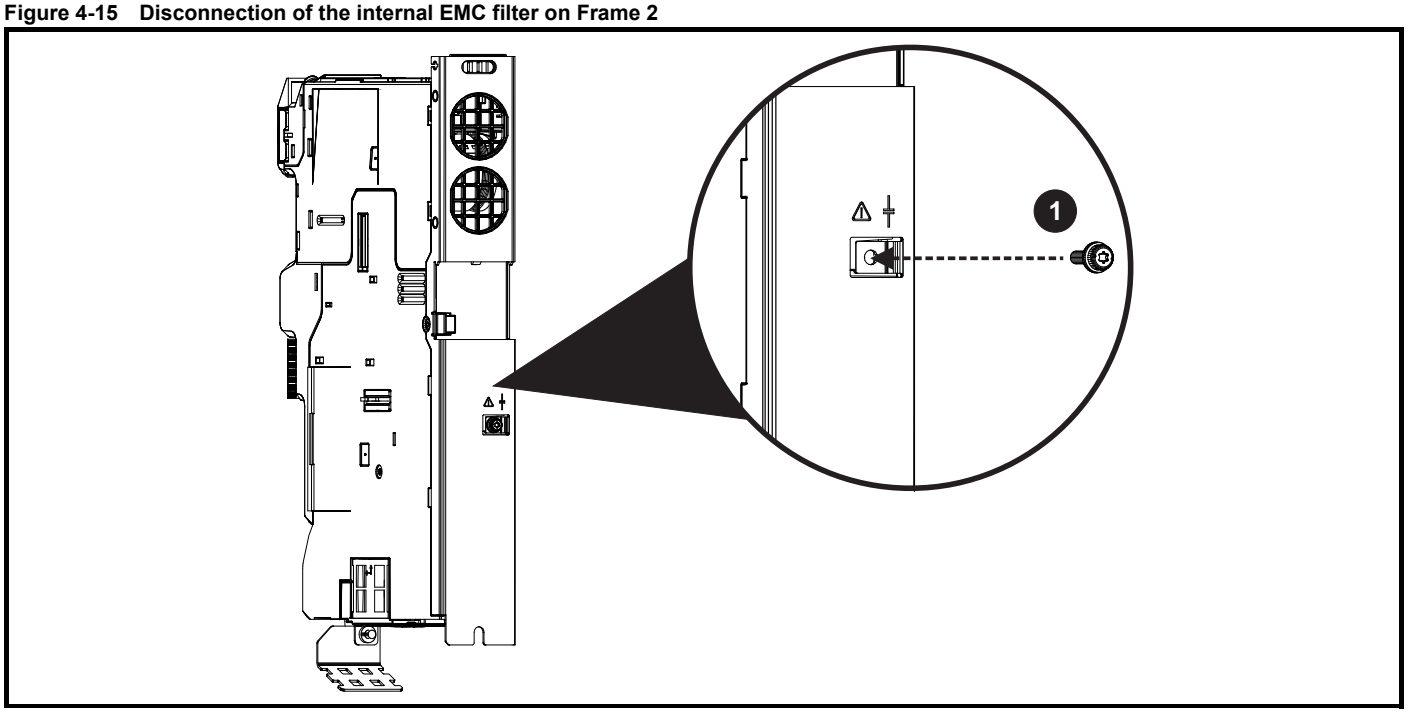

- To electrically disconnect the internal EMC filter, remove the screw (**1**) as shown above.

Figure 4-16 Disconnection of the internal EMC filter on Frame 3

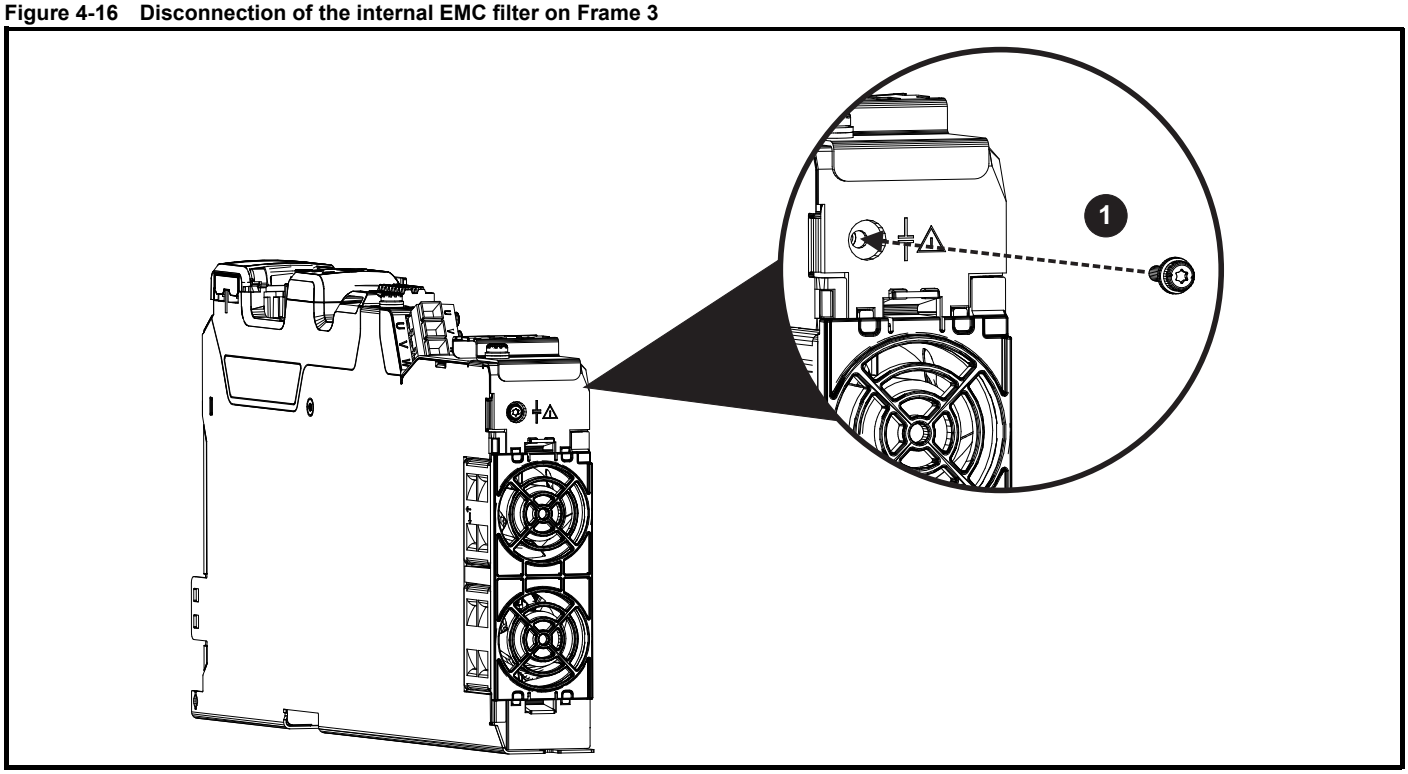

- To electrically disconnect the internal EMC filter, remove the screw (**1**) as shown above.

4.10.4 General requirements for EMC Ground (earth) connections

The grounding arrangements should be in accordance with Figure 4-17, which shows a single drive on a back-plate with or without an additional enclosure.

Figure 4-17 shows how to configure and minimise EMC when using unshielded motor cable. However shielded cable is a better option, in which case it should be installed as shown in section 4.10.7 *Compliance with generic emission standards* on page 81.

Figure 4-17 General EMC enclosure layout showing ground connections

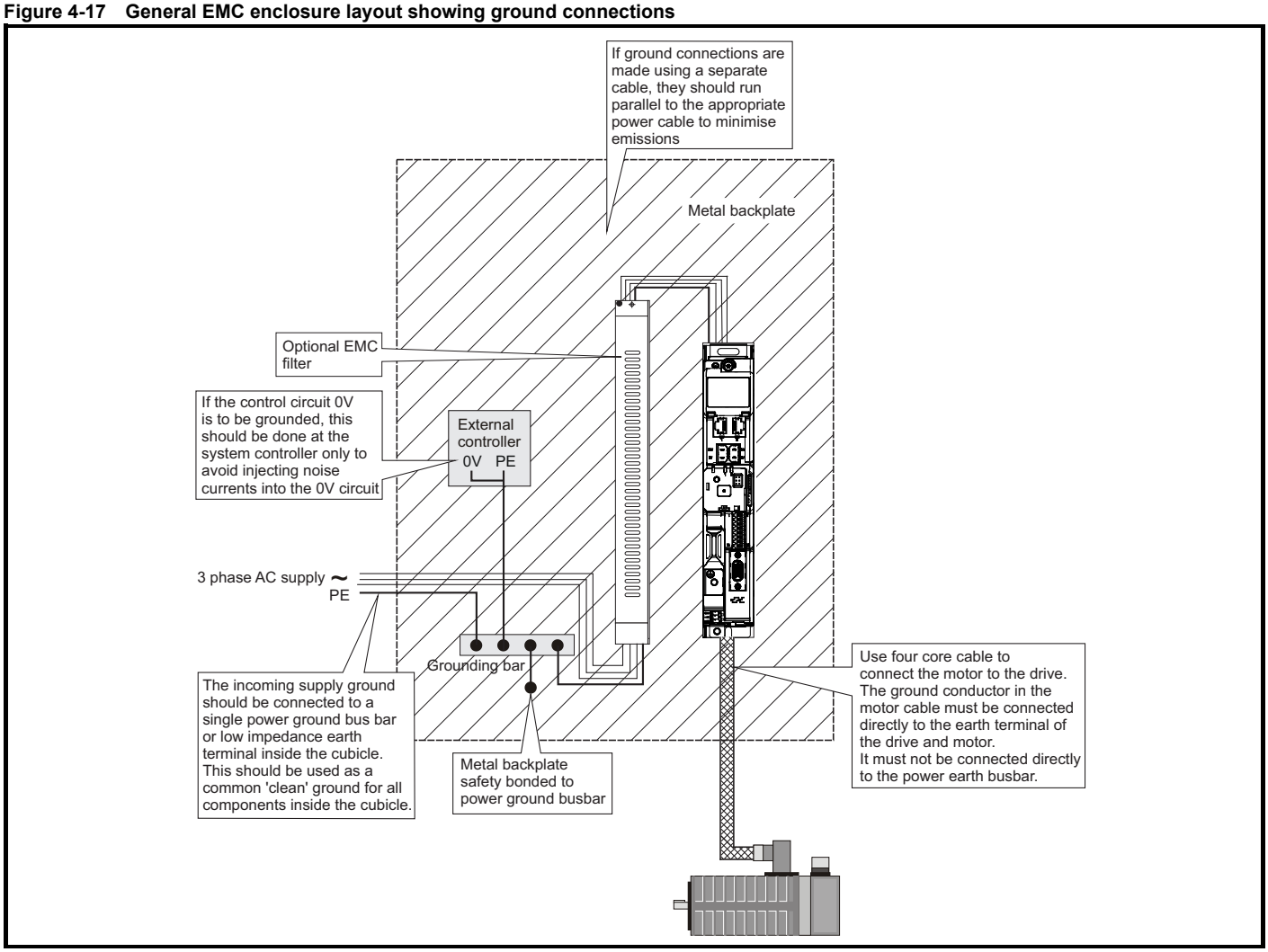

4.10.5 Cable layout

Figure 4-18 indicates the clearances which should be observed around the drive and related 'noisy' power cables by all sensitive control signals / equipment.

Figure 4-18 Drive cable clearances

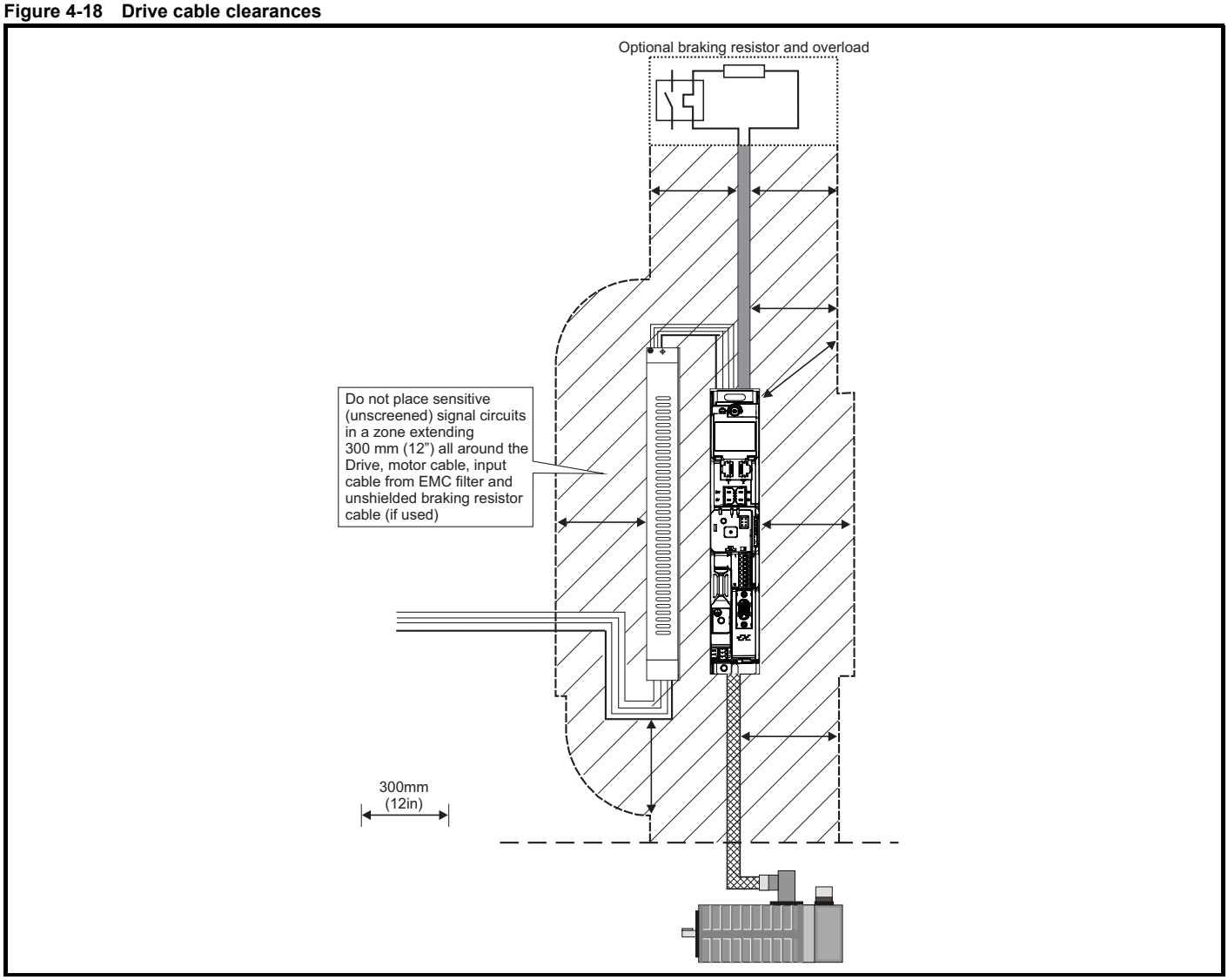

NOTE

Any signal cables which are carried inside the motor cable (i.e. motor thermistor, motor brake) will pick up large pulse currents via the cable capacitance. The shield of these signal cables must be connected to ground close to the motor cable, to avoid this noise current spreading through the control system.

Feedback device cable shielding

Shielding considerations are important for PWM drive installations due to the high voltages and currents present in the output (motor) circuit with a very wide frequency spectrum, typically from 0 to 20 MHz.

The following guidance is divided into two parts:

1. Ensuring correct transfer of data without disturbance from electrical noise originating either within the drive or from outside.
2. Additional measures to prevent unwanted emission of radio frequency noise. These are optional and only required where the installation is subject to specific requirements for radio frequency emission control.

To ensure correct transfer of data, observe the following:

Resolver connections:

- Use a cable with an overall shield and twisted pairs for the resolver signals.
- Connect the cable shield to the drive 0V connection by the shortest possible link ("pigtail").
- It is generally preferable not to connect the cable shield to the resolver. However in cases where there is an exceptional level of common-mode noise voltage present on the resolver body, it may be helpful to connect the shield there. If this is done then it becomes essential to ensure the absolute minimum length of "pigtails" at both shield connections, and possibly to clamp the cable shield directly to the resolver body and to the drive grounding bracket.

- The cable should preferably not be interrupted. If interruptions are unavoidable, ensure the absolute minimum length of "pigtail" in the shield connections at each interruption.

Encoder connections:

- Use a cable with the correct impedance.
- Use a cable with individually shielded twisted pairs.
- Connect the cable shields to 0V at both the drive and the encoder, using the shortest possible links ("pigtails").
- The cable should preferably not be interrupted. If interruptions are unavoidable, ensure the absolute minimum length of "pigtail" in the shield connections at each interruption. Preferably, use a connection method which provides substantial metallic clamps for the cable shield terminations.

The above applies where the encoder body is isolated from the motor and where the encoder circuit is isolated from the encoder body. Where there is no isolation between the encoder circuits and the motor body, and in case of doubt, the following additional requirement must be observed. This gives the best possible noise immunity.

- The shields must be directly clamped to the encoder body (no pigtail) and to the drive grounding bracket. This may be achieved by clamping of the individual shields or by providing an additional overall shield which is clamped.

NOTE

The recommendations of the encoder manufacturer must also be adhered to for the encoder connections.

NOTE

In order to guarantee maximum noise immunity for any application double shielded cable as shown should be used.

In some cases single shielding of each pair of differential signals cables, or a single overall shield with individual shield on the thermistor connections is sufficient. In these cases all the shields should be connected to ground and 0 V at both ends.

If the 0 V is required to be left floating a cable with individual shields and an overall shield must be used.

Figure 4-19 and Figure 4-20 illustrate the preferred construction of cable and the method of clamping. The outer sheath of the cable should be stripped back enough to allow the clamp to be installed. The shield must not be broken or opened at this point. The clamps should be installed close to the drive (cable screen bracket) or feedback device, with the ground connections made to a ground plate or similar metallic ground surface.

Figure 4-19 Feedback cable, twisted pair

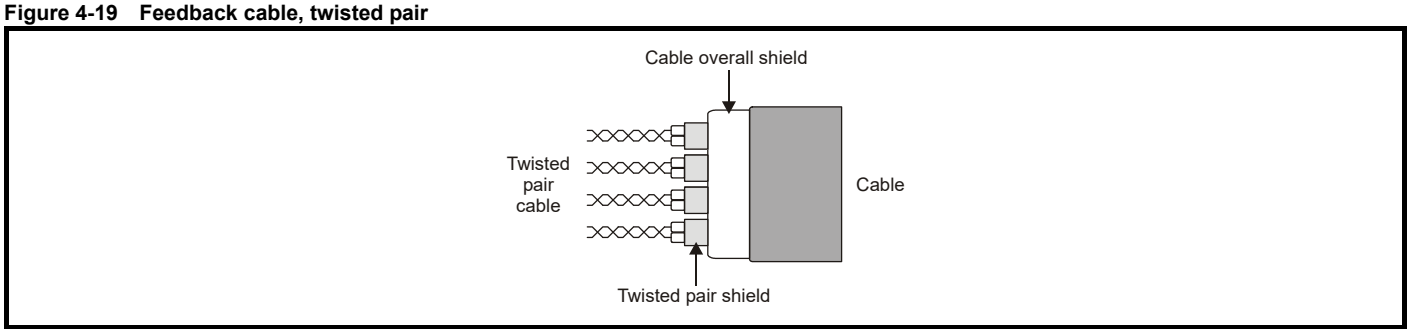

Figure 4-20 Feedback cable connections

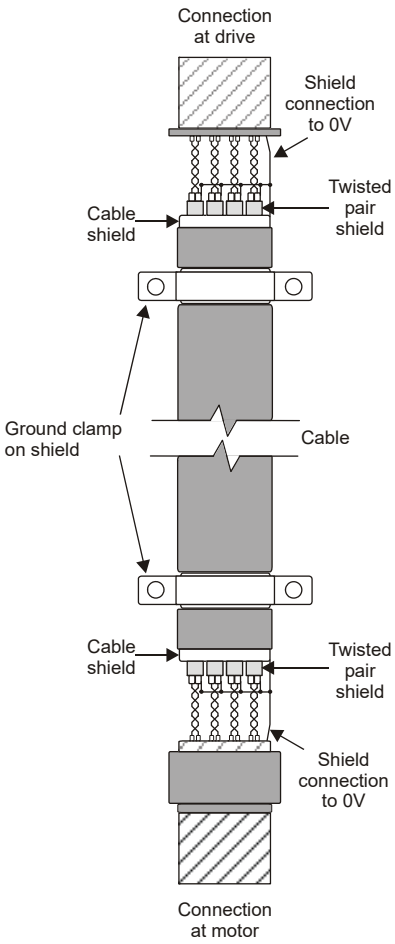

To ensure suppression of radio frequency emission, observe the following:

- Use a cable with an overall shield.
- Clamp the overall shield to grounded metallic surfaces at both the encoder and the drive (using the cable screen bracket on the drive), as illustrated in Figure 4-20.

4.10.6 Compliance with BS EN IEC 61800-3:2018 (standard for Power Drive Systems)

Meeting the requirements of this standard depends on the environment that the drive is intended to operate in, as follows:

Operation in the first environment

Observe the guidelines given in section 4.10.7 *Compliance with generic emission standards*. An external EMC filter will always be required.

CAUTION

This is a product of the restricted distribution class according to IEC 61800-3.

In a residential environment this product may cause radio interference in which case the user may be required to take adequate measures.

Operation in the second environment

In all cases a shielded motor cable must be used, and an EMC filter is required for all drives with a rated input current of less than 100 A.

The drive contains an in-built filter for basic emission control. In some cases feeding the motor cables (U, V and W) once through a ferrite ring can maintain compliance for longer cable lengths.

Depending on the level of compliance required, motor cable length and inverter switching frequency, an external EMC filter may or may not be needed; refer to section 6.1.27 *Electromagnetic compatibility (EMC)* on page 133 for more information.

For longer motor cables, an external filter is required. Where a filter is required, follow the guidelines in section 4.10.7 *Compliance with generic emission standards* on page 81.

Where a filter is not required, follow the guidelines given in section 4.10.4 *General requirements for EMC Ground (earth) connections* on page 76.

CAUTION

The second environment typically includes an industrial low-voltage power supply network which does not supply buildings used for residential purposes. Operating the drive in this environment without an external EMC filter may cause interference to nearby electronic equipment whose sensitivity has not been appreciated. The user must take remedial measures if this situation arises. If the consequences of unexpected disturbances are severe, it is recommended that the guidelines in *section 4.10.7 Compliance with generic emission standards* be adhered to.

Refer to section 4.10 *EMC (Electromagnetic compatibility)* on page 70 for further information on compliance with EMC standards and definitions of environments.

Detailed instructions and EMC information are given in the *Digitax HD M75X EMC Data Sheet* which is available from the supplier of the drive.

4.10.7 Compliance with generic emission standards

Use the recommended filter and shielded motor cable. Observe the layout rules given in Figure 4-21 and Figure 4-22. Ensure the AC supply and ground cables are at least 100 mm from the power module and motor cable.

Figure 4-21 Supply and ground cable clearance

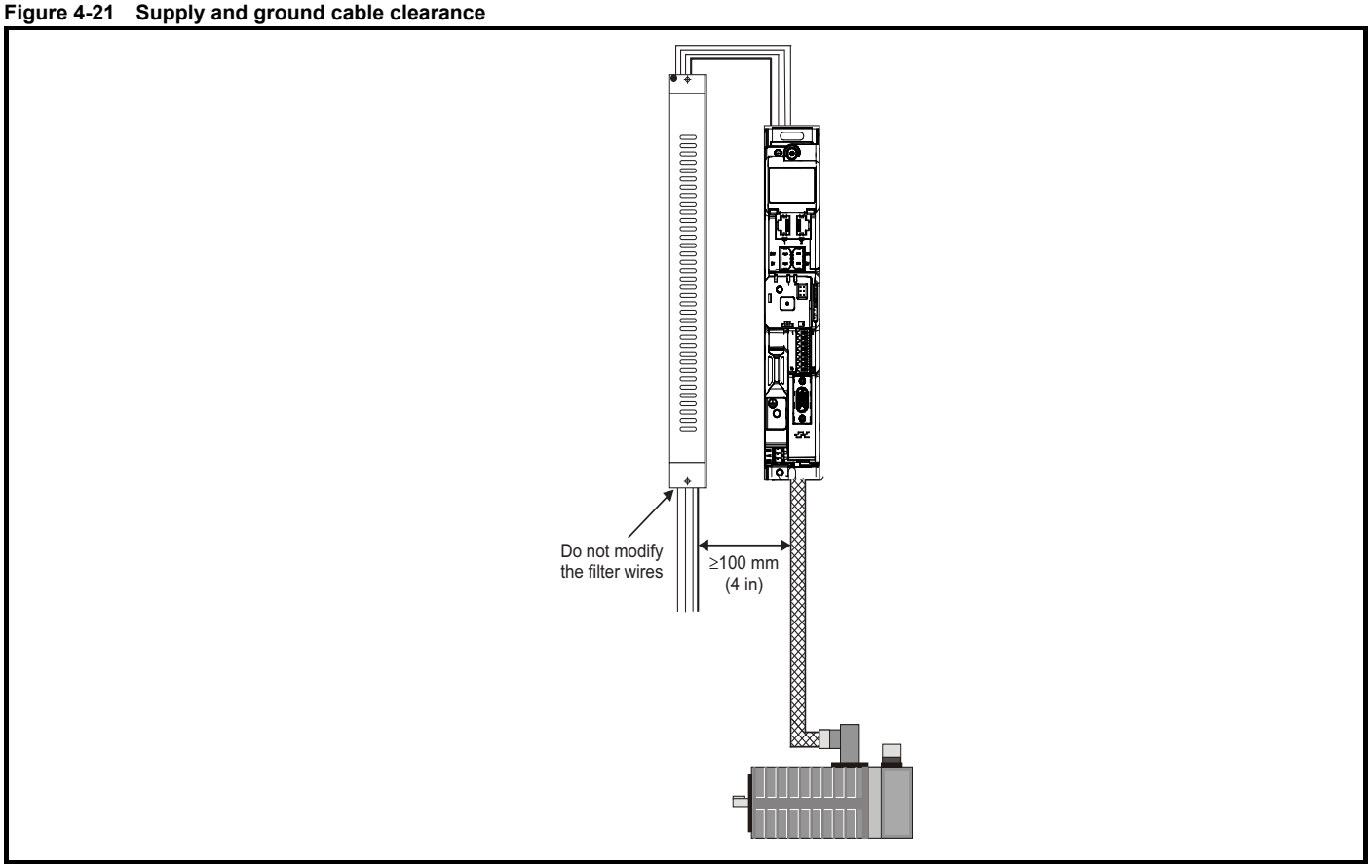

Figure 4-22 Sensitive signal circuit clearance

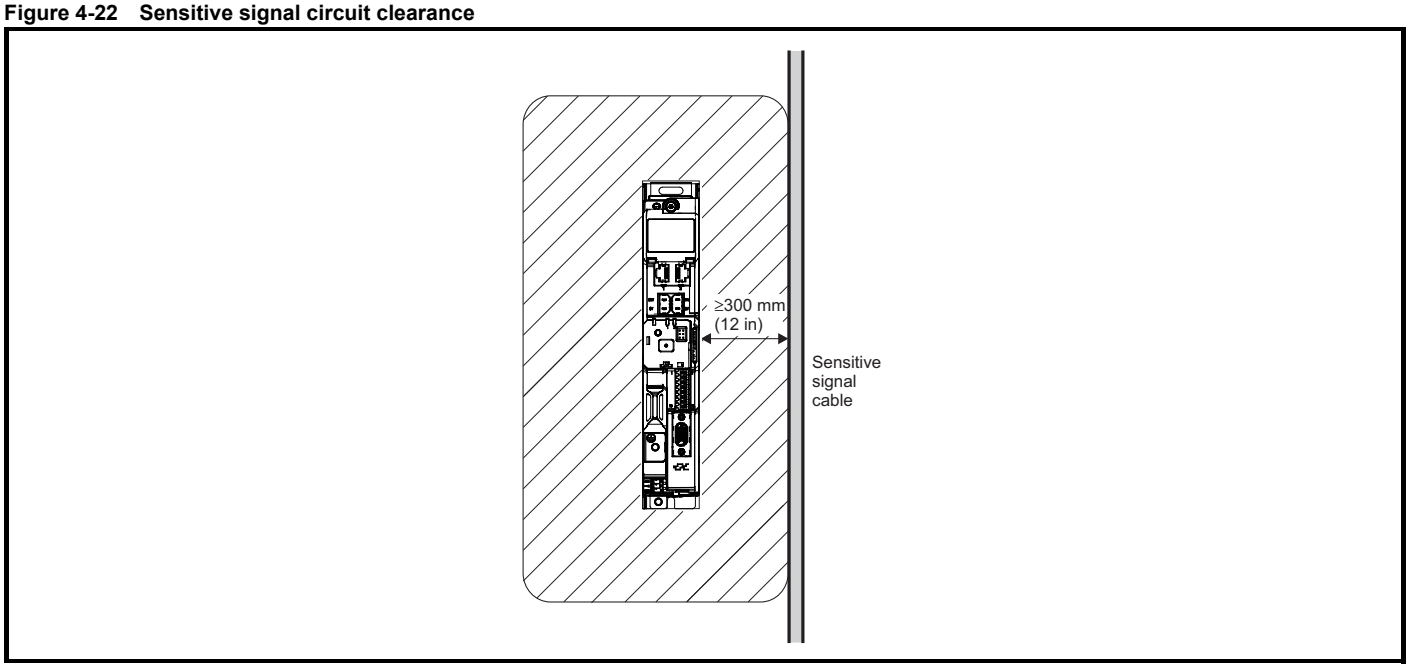

Avoid placing sensitive signal circuits in a zone 300 mm in the area immediately surrounding the power module. Ensure good EMC grounding.

Figure 4-23 Grounding the drive, motor cable shield and filter

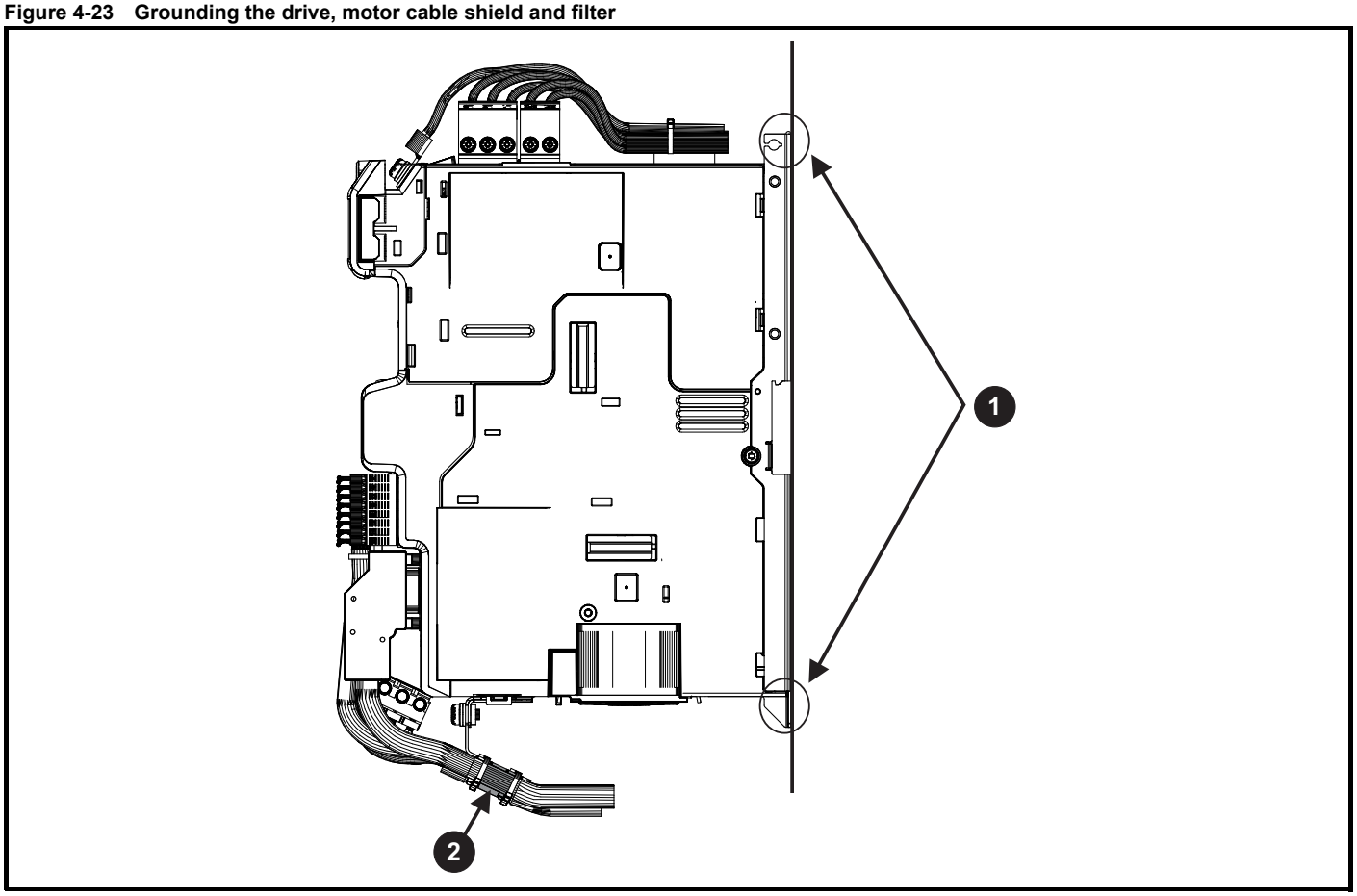

1. Ensure direct metal contact at drive mounting points (any paint must be removed).
2. Motor cable shield (unbroken) electrically connected to and held in place by cable screen bracket. Ensure the motor cable shield is continued beyond the cable screen bracket and right up to the motor cable terminal on the drive.

Connect the shield of the motor cable to the ground terminal of the motor frame using a link that is as short as possible and not exceeding 50 mm long.

A complete 360° termination of the shield to the terminal housing of the motor is beneficial.

From an EMC consideration it is irrelevant whether the motor cable contains an internal (safety) ground core, or if there is a separate external ground conductor, or where grounding is through the shield alone. An internal ground core will carry a high noise current and therefore it must be terminated as close as possible to the shield termination.

Figure 4-24 Grounding the motor cable shield

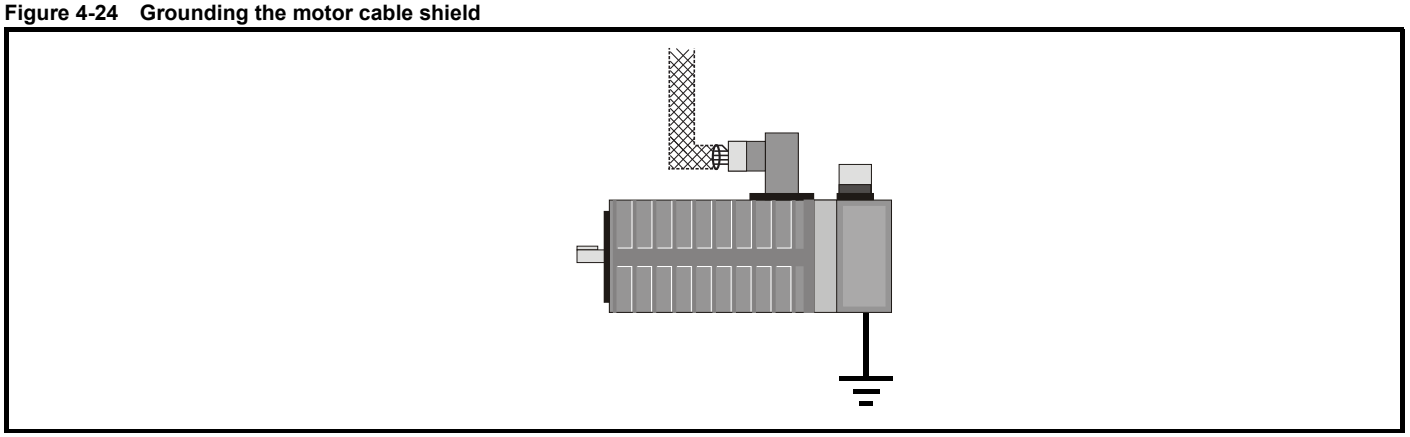

Unshielded wiring to the optional braking resistor(s) may be used provided the wiring runs internally to the enclosure. Ensure a minimum spacing of 300 mm from the signal wiring and the AC supply wiring to the external EMC filter. If this condition cannot be met then the wiring must be shielded.

Figure 4-25 Shielding requirements of optional external braking resistor

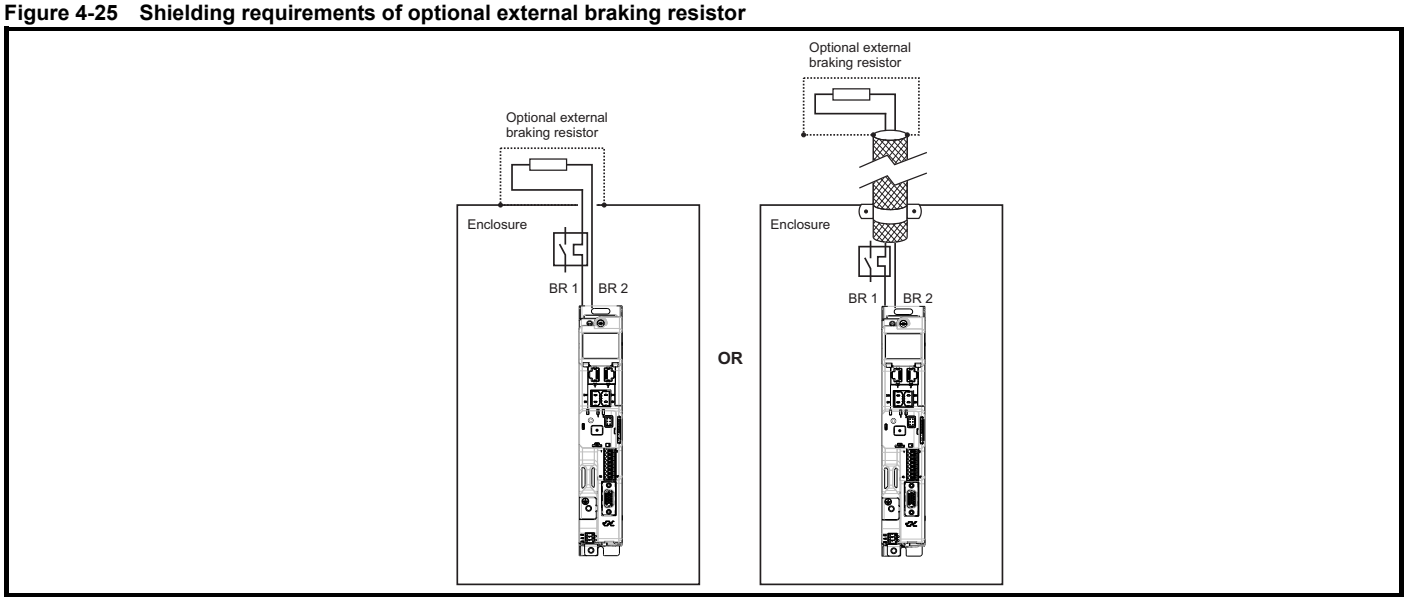

If the control wiring is to leave the enclosure, it must be shielded and the shield(s) clamped to the drive using the cable screen bracket as shown in Figure 4-23. Remove the outer insulating cover of the cable to ensure the shield(s) make direct contact with the bracket, but keep the shield(s) intact until as close as possible to the terminals. Alternatively, wiring may be passed through a ferrite ring, part number 3225-1004.

4.10.8 Variations in the EMC wiring

Interruptions to the motor cable

The motor cable should ideally be a single length of shielded or armored cable having no interruptions. In some situations it may be necessary to interrupt the cable, as in the following examples:

- Connecting the motor cable to a terminal block in the drive enclosure
- Installing a motor isolator / disconnect switch for safety when work is done on the motor

In these cases the following guidelines should be followed.

Terminal block in the enclosure

The motor cable shields should be bonded to the back-plate using un-insulated metal cable-clamps which should be positioned as close as possible to the terminal block. Keep the length of power conductors to a minimum and ensure that all sensitive equipment and circuits are at least 0.3 m away from the terminal block.

Figure 4-26 Connecting the motor cable to a terminal block in the enclosure

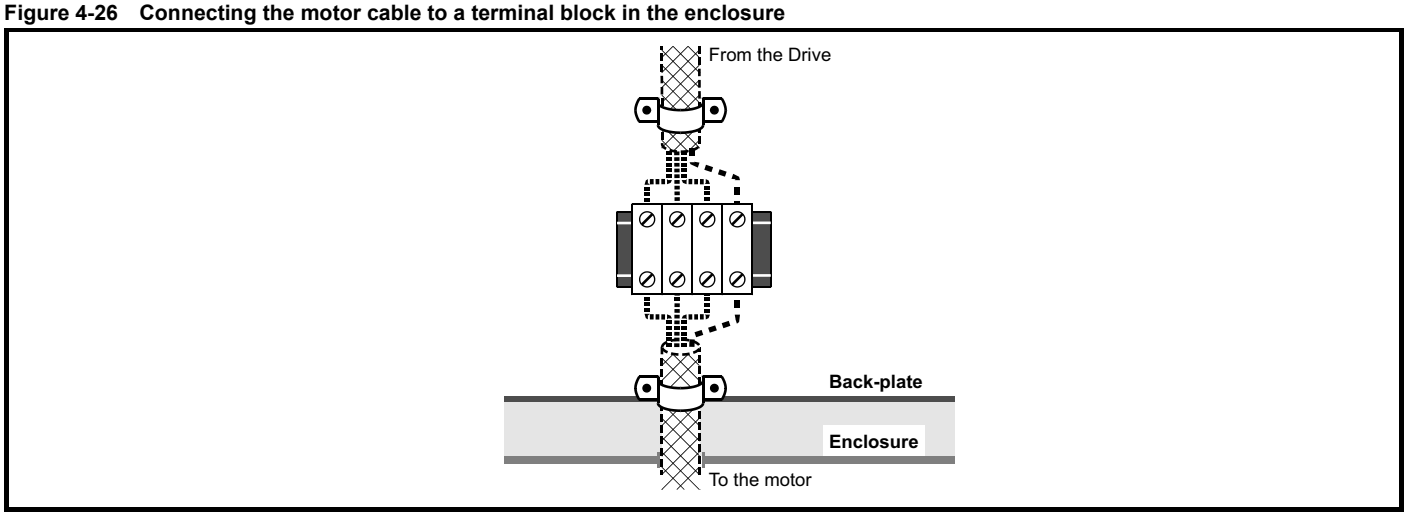

Using a motor isolator / disconnect-switch

The motor cable shields should be connected by a very short conductor having a low inductance. The use of a flat metal coupling-bar is recommended; conventional wire is not suitable.

The shields should be bonded directly to the coupling-bar using un-insulated metal cable-clamps. Keep the length of the exposed power conductors to a minimum and ensure that all sensitive equipment and circuits are at least 0.3 m away.

The coupling-bar may be grounded to a known low-impedance ground nearby, for example a large metallic structure which is connected closely to the drive ground.

Figure 4-27 Connecting the motor cable to an isolator / disconnect switch

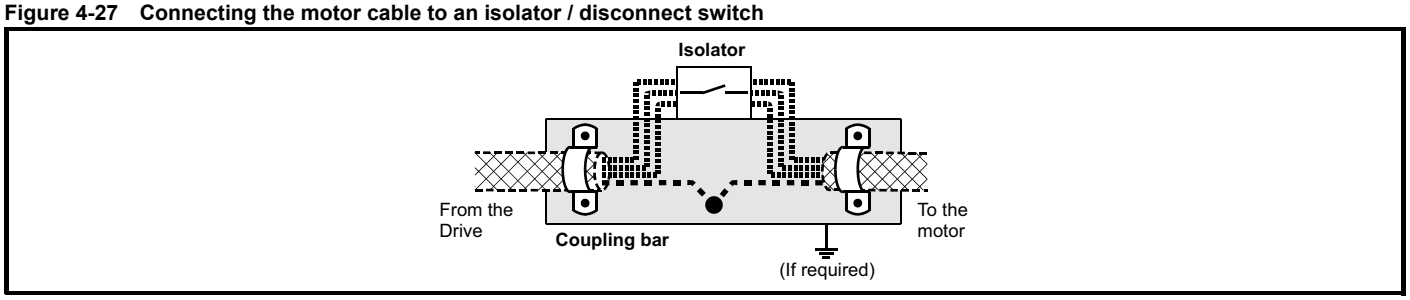

4.10.9 Surge immunity of control circuits - long cables and connections outside a building

The input/output ports for the control circuits are designed for general use within machines and small systems without any special precautions.

These circuits do not meet the requirements of EN 61000-6-2:2005 (1 kV surge) without external protection.

In applications where they may be exposed to high-energy voltage surges, some special measures may be required to prevent malfunction or damage. Surges may be caused by lightning or severe power faults in association with grounding arrangements which permit high transient voltages between nominally grounded points. This is a particular risk where the circuits extend outside the protection of a building.

As a general rule, if the circuits are to pass outside the building where the drive is located, or if cable runs within a building exceed 30 m, some additional precautions are advisable. One of the following techniques should be used:

1. Shielded cable with additional power ground bonding. The cable shield may be connected to ground at both ends, but in addition the ground conductors at both ends of the cable must be bonded together by a power ground cable (equipotential bonding cable) with cross-sectional area of at least 10 mm², or 10 times the area of the signal cable shield, or to suit the electrical safety requirements of the plant. This ensures that fault or surge current passes mainly through the ground cable and not in the signal cable shield. If the building or plant has a well-designed common bonded network this precaution is not necessary.

2. Additional over-voltage suppression - for the analog and digital inputs and outputs, a zener diode network or a commercially available surge suppressor may be connected in parallel with the input circuit as shown in Figure 4-28 and Figure 4-29.

If a digital port experiences a severe surge its protective trip may operate (I/O Overload trip). For continued operation after such an event, the trip can be reset automatically by setting Pr **10.034** to 5.

Figure 4-28 Surge suppression for digital and unipolar inputs and outputs

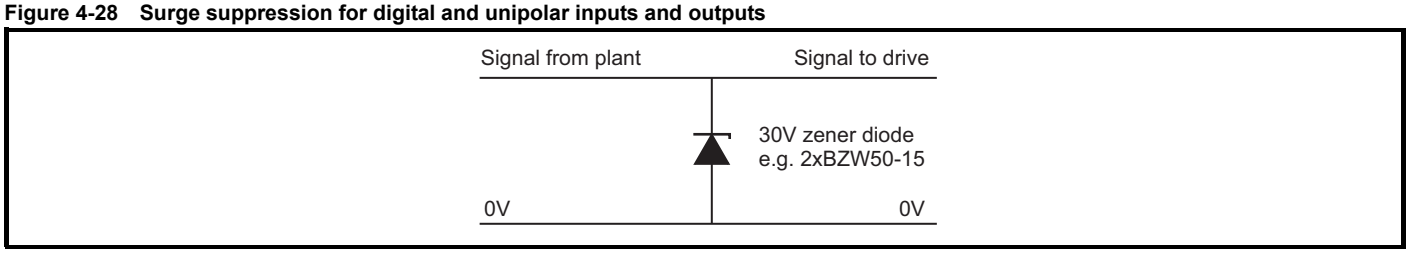

Figure 4-29 Surge suppression for analog and bipolar inputs and outputs

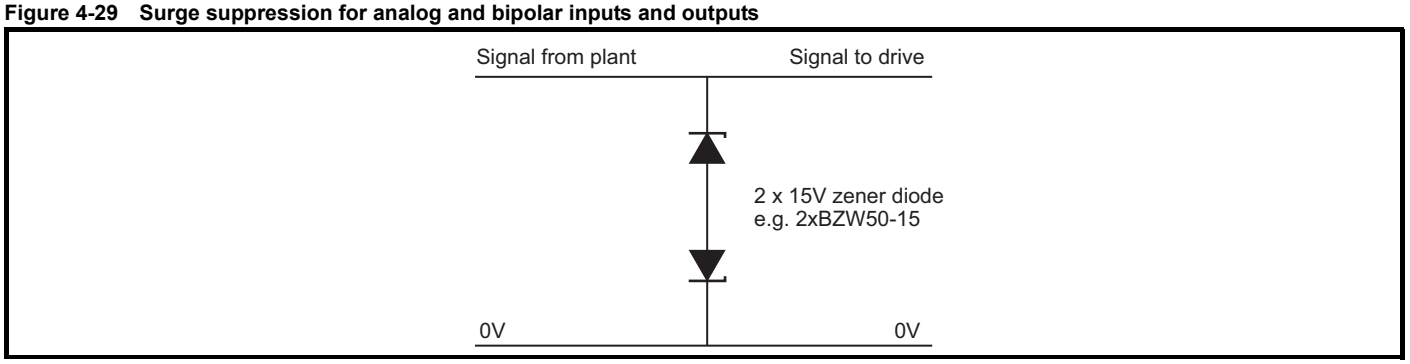

Surge suppression devices are available as rail-mounting modules, e.g. from Phoenix Contact:

Unipolar	TT-UKK5-D/24 DC
Bipolar	TT-UKK5-D/24 AC

These devices are not suitable for encoder signals or fast digital data networks because the capacitance of the diodes adversely affects the signal. Most encoders have galvanic isolation of the signal circuit from the motor frame, in which case no precautions are required. For data networks, follow the specific recommendations for the particular network.

4.11 Control terminals

NOTE

The control circuits are isolated from the power circuits in the drive by reinforced insulation.

Figure 4-30 Default control terminal functions

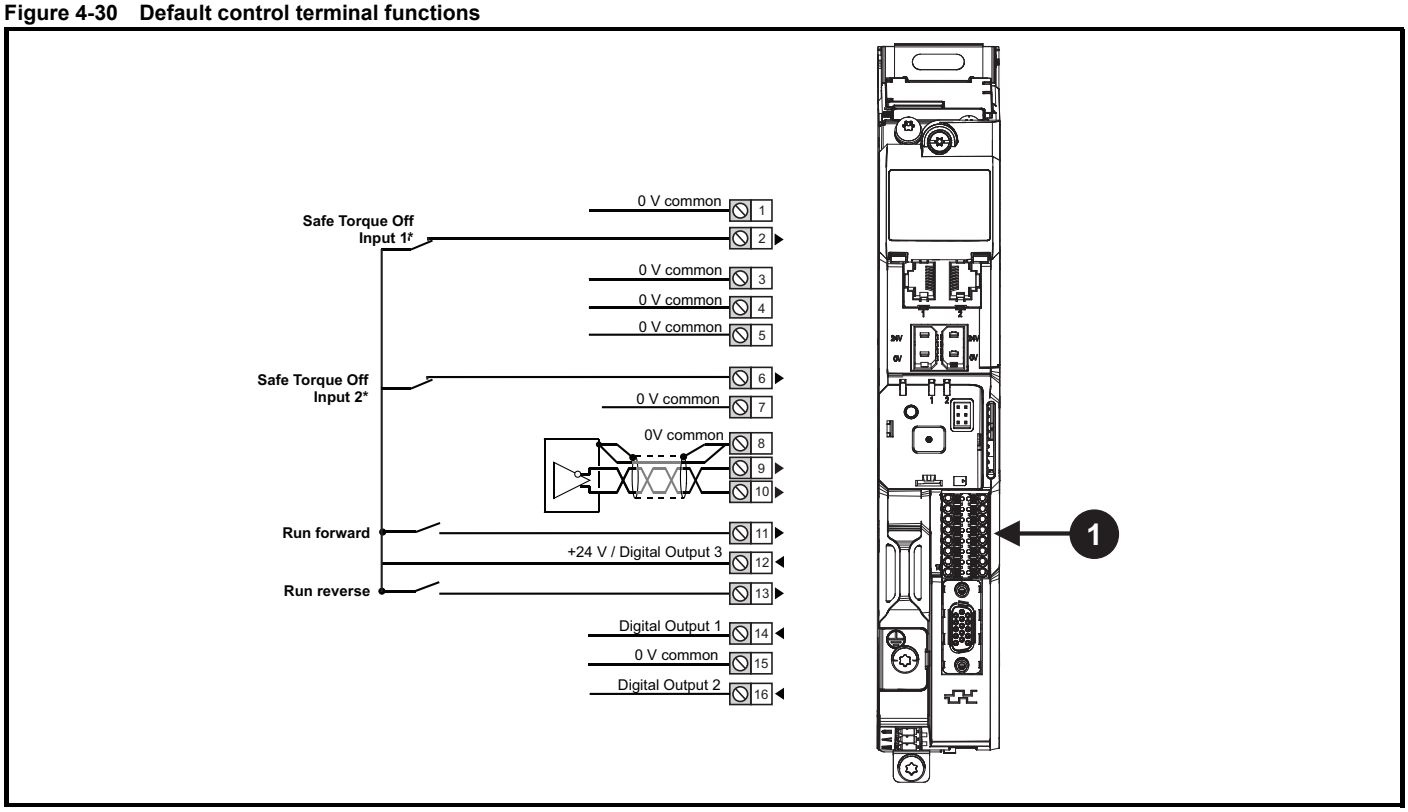

1. Polarized signal connections.

* The Safe Torque Off / Drive enable terminal is a positive logic input only

4.11.1 Digitax HD M75X Control terminal specification

1	**0V common**
3	**0V common**
4	**0V common**
5	**0V common**
7	**0V common**
8	**0V common**
15	**0V common**
Function	**Common connection for all external devices. Internally connected to ground.**

2	**Safe Torque Off function input 1 (drive enable)**
6	**Safe Torque Off function input 2 (drive enable)**
Type	Positive logic only digital input
Voltage range	0V to +24 V
Absolute maximum applied voltage	30 V
Logic Threshold	10 V ±5 V (IEC 61131-2 type 1)
Low state maximum voltage for disable to SIL3 and PL e	5 V
Impedance	> 2 mA @15 V (IEC 61131-2, type 1)
Low state maximum current for disable to SIL3 and PL e	< 0.5 mA (IEC 61131-2 type 1)
Response time	Nominal: 8 ms Maximum: 20 ms
The Safe Torque Off function may be used in a safety-related application in preventing the drive from generating torque in the motor to a high level of integrity. The system designer is responsible for ensuring that the complete system is safe and designed correctly according to the relevant safety standards. If the Safe Torque Off function is not required, these terminals are used for enabling the drive.	

Refer to section 4.15 *Safe Torque Off (STO)* on page 96 for further information.

Analog input	
9	**Inverting input**
10	**Non-inverting input**
Default function	**Frequency/speed reference**
Type of input	Bipolar differential analog voltage
Mode controlled by:	Pr **07.007**
Operating in Voltage mode	
Full scale voltage range	±10 V ±2 %
Maximum offset	±10 mV
Absolute maximum voltage range	±36 V relative to 0V
Absolute maximum differential input voltage	±36 V
Working common mode voltage range	±13 V relative to 0V
Input resistance	≥ 100 kΩ
Monotonic	Yes (including 0V)
Dead band	None (including 0V)
Jumps	None (including 0V)
Maximum offset	20 mV
Maximum non linearity	0.3 % of input
Maximum gain asymmetry	0.5 %
Input filter bandwidth single pole	~3 kHz
Resolution	12 bits (11 bits plus sign)
Sample / update period	250 µs with destinations Pr **01.036**, Pr **01.037**, Pr **03.022** or Pr **04.008** in RFC-A and RFC-S modes. 4 ms for open loop mode and all other destinations in RFC-A or RFC-S modes.

11	**Digital Input 4**
13	**Digital Input 5**
Terminal 11 default function	**RUN FORWARD input**
Terminal 13 default function	**RUN REVERSE input**
Type	Negative or positive logic digital inputs
Voltage range	0V to +24 V
Absolute maximum applied voltage range	-3 V to +30 V
Impedance	>2 mA @15 V (IEC 61131-2, type 1)
Input thresholds	10 V ±0.8 V (IEC 61131-2, type 1)
Sample / Update period	250 µs when configured as an input with destinations Pr **06.035** or Pr **06.036**. 600 µs when configured as an input with destination Pr **06.029**. 2 ms in all other cases.

12	**+24 V user output / Digital Output 3 (selectable)**
Terminal 12 default function	**+24 V user output**
Programmability	Can be switched on or off to act as a third digital output (positive logic only) by setting the source Pr **08.028** and source invert Pr **08.018**
Nominal output current	100 mA
Maximum output current	100 mA 200 mA (total including DO1)
Protection	Current limit and trip
Sample / update period	2 ms when configured as an output (output will only change at the update rate of the source parameter if slower)

The 24 Vdc user output is SELV BS EN61800-5-1.

14	**Digital Output 1**
Terminal 14 default function	**AT ZERO SPEED output**
Type	Positive logic voltage source outputs
Operating as an output	
Nominal maximum output current	100 mA
Maximum output current	200 mA (combined with +24 V user output/ DO3)
Voltage range	0V to +24 V
Sample / Update period	**2 ms (output will only change at the update rate of the source parameter**

16	**Digital Output 2**
Terminal 16 default function	**High current motor brake output**
Type	Positive logic voltage source outputs
Operating as an output	
Nominal output current	1 A (1.3 A max)
Voltage range	0V to +24 V
Sample / Update period	**2 ms (output will only change at the update rate of the source parameter**

4.12 Digitax HD M75C Capacitor Module status relay

41 **42**	**Relay contacts**
Default function	**Drive OK indicator**
Contact voltage rating	240 Vac, Installation over-voltage, category II
Contact maximum current rating	2 A AC 240 V 4 A DC 30 V resistive load 0.5 A DC 30 V inductive load (L/R = 40 ms)
Contact minimum recommended rating	12 V 100 mA
Contact type	Normally open
Default contact condition	Closed when power applied and drive OK
Update period	4 ms

4.13 Position feedback connections

The following functions are provided via the 15-way high density D-type connector on the drive:

- Two position feedback interfaces (P1 and P2).
- One encoder simulation output.
- Two freeze trigger inputs (marker inputs).
- One thermistor input.

The P1 position interface is always available but the availability of the P2 position interface and the encoder simulation output depends on the position feedback device used on the P1 position interface, as shown in Table 4-20.

4.13.1 Location of position feedback connector

Figure 4-31 Location of position feedback connector

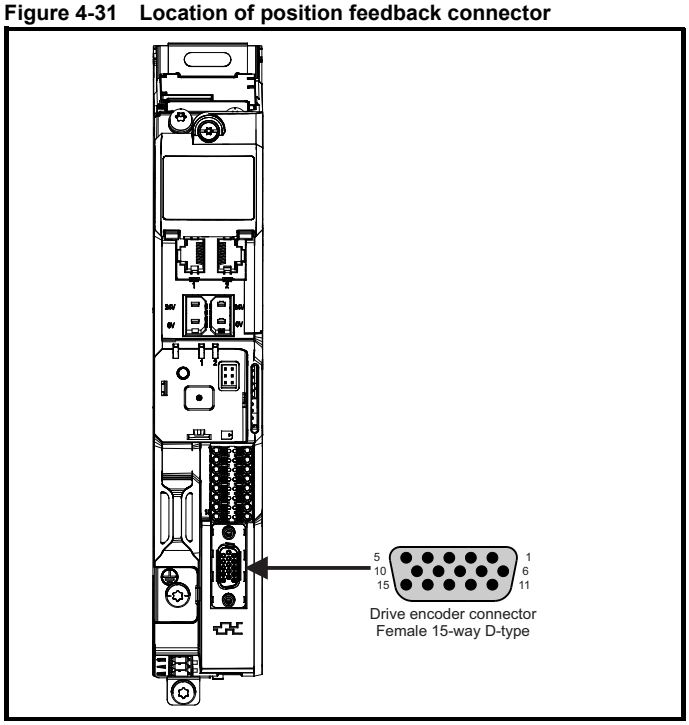

4.13.2 Compatible position feedback devices

Table 4-18 Supported feedback devices on the P1 position interface

Encoder type	Pr 03.038 setting
Quadrature incremental encoders with or without marker pulse	AB (0)
Quadrature incremental encoders with UVW commutation signals for absolute position for permanent magnet motors with or without marker pulse	AB Servo (3)
Forward / reverse incremental encoders with or without marker pulse	FR (2)
Forward / reverse incremental encoders with UVW commutation signals for absolute position for permanent magnet motors with or without marker pulse	FR Servo (5)
Frequency and direction incremental encoders with or without marker pulse	FD (1)
Frequency and direction incremental encoders with UVW commutation signals for absolute position for permanent magnet motors with or without marker pulse	FD Servo (4)
Sincos incremental encoders	SC (6)
Sincos incremental with commutation signals	SC Servo (12)
Heidenhain sincos encoders with EnDat comms for absolute position	SC EnDat (9)
Stegmann sincos encoders with Hiperface comms for absolute position	SC Hiperface (7)
Sincos encoders with SSI comms for absolute position	SC SSI (11)
Sincos incremental with absolute position from single sin and cosine signals	SC SC (15)
SSI encoders (Gray code or binary)	SSI (10)
EnDat communication only encoders	EnDat (8)
Resolver	Resolver (14)
UVW commutation only encoders*	Commutation only (16)
BiSS communication only encoders	BiSS (13)
Sincos encoders with BiSS communications	SC BiSS (17)

* This feedback device provides very low resolution feedback and should not be used for applications requiring a high level of performance

Table 4-19 Supported feedback devices on the P2 position interface

Encoder type	Pr 03.138 setting
Quadrature incremental encoders with or without marker pulse	AB (1)
Frequency and direction incremental encoders with or without marker pulse	FD (2)
Forward / reverse incremental encoders with or without marker pulse	FR (3)
EnDat communication only encoders	EnDat (4)
SSI encoders (Gray code or binary)	SSI (5)
BiSS communication only encoders	BiSS (6)

Table 4-20 shows the possible combinations of position feedback device types connected to the P1 and P2 position interfaces and the availability of the encoder simulation output.

Table 4-20 Availability of the P2 position feedback interface and the encoder simulation output

Functions		
P1 Position feedback interface	**P2 Position feedback interface**	**Encoder Simulation Output**
AB Servo FD Servo FR Servo SC Servo SC SC Commutation only	None	None
AB FD FR SC Resolver SC Hiperface	AB, FD, FR EnDat, SSI, BiSS	None
	None	Full
SC EnDat SC SSI SC BiSS	AB, FD, FR (No Z marker pulse input)	None
	EnDat, SSI (with freeze input), BiSS	
	None	No Z marker pulse output
EnDat SSI BiSS	AB, FD, FR EnDat, SSI (with freeze input), BiSS	None
	None	Full
	EnDat, SSI, BiSS	No Z marker pulse output

The priority of the position feedback interfaces and the encoder simulation output on the 15-way D-type is assigned in the following order from the highest priority to the lowest.

- P1 position interface (highest)
- Encoder simulation output
- P2 position interface (lowest)

For example, if an AB Servo type position feedback device is selected for use on the P1 position interface, then both the encoder simulation output and the P2 position interface will not be available as this device uses all connections of the 15-way D-type connector. Also, if an AB type position feedback device is selected for use on the P1 position interface and Pr **03.085** is set to a valid source for the encoder simulation output, then the P2 position interface will not be available.

Depending on the device type used on the P1 position interface, the encoder simulation output may not be able support a marker pulse output (e.g. SC EnDat or SC SSI device types). Pr **03.086** shows the status of the encoder simulation output indicating whether the output is disabled, no marker pulse is available or full encoder simulation is available.

NOTE

When using the P1 and P2 position interfaces and the encoder simulation output together, the P2 position interface uses alternative connections on the 15-way D-type connector. Pr **03.172** shows the status of the P2 position interface and indicates if alternative connections are being used for the P2 position interface.

4.13.3 Position feedback connection details

Table 4-21 P1 Position feedback connection details

P1 Position feedback interface Pr 03.038	Connections														
	1	2	3	4	5	6	7	8	9	10	11	12	13	14	15
AB (0)	A	A\	B	B\	Z	Z\							+V	0V	Th
FD (1)	F	F\	D	D\	Z	Z\									
FR (2)	F	F\	R	R\	Z	Z\									
AB Servo (3)	A	A\	B	B\	Z	Z\	U	U\	V	V\	W	W\			
FD Servo (4)	F	F\	D	D\	Z	Z\	U	U\	V	V\	W	W\			
FR Servo (5)	F	F\	R	R\	Z	Z\	U	U\	V	V\	W	W\			
SC (6)	A (Cos)	A\ (Cos\)	B (Sin)	B\ (Sin\)	Z	Z\									
SC Hiperface (7)	Cos	Cosref	Sin	Sinref	DATA	DATA\									
EnDat (8)	DATA	DATA\	CLK	CLK\	Freeze	Freeze\									
SC EnDat (9)	A	A\	B	B\	DATA	DATA\					CLK	CLK\			
SSI (10)	DATA	DATA\	CLK	CLK\	Freeze	Freeze\									
SC SSI (11)	A (Cos)	A\ (Cos\)	B (Sin)	B\ (Sin\)	DATA	DATA\					CLK	CLK\			
SC Servo (12)	A (Cos)	A\ (Cos\)	B (Sin)	B\ (Sin\)	Z	Z\	U	U\	V	V\	W	W\			
BiSS (13)	DATA	DATA\	CLK	CLK\	Freeze	Freeze\									
Resolver (14)	Cos H	Cos L	Sin H	Sin L	Ref H	Ref L									
SC SC (15)	A (Cos)	A\ (Cos\)	B (Sin)	B\ (Sin\)	Z	Z\	C*1	C*1	D*2	D*2	Freeze2	Freeze2\			
Commutation Only (16)							U	U\	V	V\	W	W\			
SC BiSS (17)	A (Cos)	A\ (Cos\)	B (Sin)	B\ (Sin\)	DATA	DATA\					CLK	CLK\			

*1 - One cosine wave per revolution

*2 - One sine wave per revolution

Greyed cells are for P2 position feedback connections or simulated encoder outputs.

NOTE

Freeze and Freeze\ on terminals 5 and 6 are for Freeze input 1. Freeze2 and Freeze2\ on terminals 11 and 12 are for Freeze input 2.

Table 4-22 P2 Position feedback and encoder simulation output connection details

P1 Position feedback interface Pr 03.038	P2 Position feedback interface Pr 03.138	Encoder Simulation Output	Connections							
			5	6	7	8	9	10	11	12
AB (0) FD (1) FR (2) SC (6) SC Hiperface (7) Resolver (14)	AB (1)	Disabled*1			A	A\	B	B\	Z	Z\
	FD (2)				F	F\	D	D\	Z	Z\
	FR (3)				F	F\	R	R\	Z	Z\
	EnDat (4) SSI (5) BiSS (6)				DATA	DATA\	CLK	CLK\	Freeze2	Freeze2\
	None (0)	AB			Asim	Asim\	Bsim	Bsim\	Zsim	Zsim\
		FD			Fsim	Fsim\	Dsim	Dsim\	Zsim	Zsim\
		FR			Fsim	Fsim\	Rsim	Rsim\	Zsim	Zsim\
		SSI			DATAsim	DATAsim\	CLKsim	CLKsim\		
SC EnDat (9) SC SSI (11) SC BiSS (17)	AB (1)	Disabled*1			A	A\	B	B\		
	FD (2)				F	F\	D	D\		
	FR (3)				F	F\	R	R\		
	EnDat (4) SSI (5) BiSS (6)				DATA	DATA\	CLK	CLK\		
	None (0)	AB			Asim	Asim\	Bsim	Bsim\		
		FD			Fsim	Fsim\	Dsim	Dsim\		
		FR			Fsim	Fsim\	Rsim	Rsim\		
		SSI			DATAsim	DATAsim\	CLKsim	CLKsim\		
EnDat (8) SSI (10) BiSS (13)	AB (1)	Disabled*1			A	A\	B	B\	Z	Z\
	FD (2)				F	F\	D	D\	Z	Z\
	FR (3)				F	F\	R	R\	Z	Z\
	EnDat (4) SSI (5) BiSS (6)				DATA	DATA\	CLK	CLK\	Freeze2	Freeze2\
	None (0)	AB			Asim	Asim\	Bsim	Bsim\	Zsim	Zsim\
		FD			Fsim	Fsim\	Dsim	Dsim\	Zsim	Zsim\
		FR			Fsim	Fsim\	Rsim	Rsim\	Zsim	Zsim\
		SSI			DATAsim	DATAsim\	CLKsim	CLKsim\		
EnDat (8) SSI (10) BiSS (13) (with no Freeze inputs)	EnDat (4) SSI (5) BiSS (6)	AB	DATA	DATA\	Asim	Asim\	Bsim	Bsim\	CLK	CLK\
		FD	DATA	DATA\	Fsim	Fsim\	Dsim	Dsim\	CLK	CLK\
		FR	DATA	DATA\	Fsim	Fsim\	Rsim	Rsim\	CLK	CLK\
		SSI	DATA	DATA\	DATAsim	DATAsim\	CLKsim	CLKsim\	CLK	CLK\

*1 The encoder simulation output is disabled when Pr **03.085** is set to zero.

NOTE

The termination resistors are always enabled on the P2 position interface. Wire break detection is not available when using AB, FD or FR position feedback device types on the P2 position interface.

4.13.4 Position feedback terminal specifications

1	**A,F, Cosref, Data, Cos H**
2	**A\,F\ Cosref\, Data\, Cos L**

AB (0), FD (1), FR (2), AB Servo (3), FD Servo(4), FR Servo (5)	
Type	EIA-485 differential receivers
Maximum input frequency	500 kHz
Line loading	< 2 unit loads
Line termination components	120 Ω (switchable)
Working common mode range	–7 V to +12 V

SC Hiperface (7), SC EnDat (9), SC SSI (11), SC Servo (12), SC SC (15), SC BiSS (17)	
Type	Differential voltage
Maximum Signal level	1.25 V peak to peak (sin with regard to sinref and cos with regard to cosref)
Maximum input frequency	See Table 4-23
Maximum applied differential voltage and common mode voltage range	±4 V
Resolution: The sine wave frequency can be up to 500 kHz but the resolution is reduced at high frequency. Table 4-23 shows the number of bits of interpolated information at different frequencies and with different voltage levels at the drive encoder port	

EnDat (8), SSI (10), BiSS (13)	
Type	EIA-485 differential receivers
Maximum input frequency	4 MHz
Line termination components	120 Ω (switchable)
Working common mode range	–7 V to +12 V

Resolver (14)	
Type	2 Vrms sinusoidal signal
Operating Frequency	6 - 8 kHz
Input voltage	0.6 Vrms
Minimum impedance	85 Ω

Common to All	
Absolute maximum applied voltage relative to 0V	-9 V to 14 V
Maximum differential voltage between terminals (with termination resistors enabled)	±6 V

3	**B, D, R Sinref, Clock, Sin H**
4	**B\, D\, R\, Sinref\, Clock\, Sin L**

AB (0), FD (1), FR (2), AB Servo (3), FD Servo(4), FR Servo (5)	
Type	EIA-485 differential receivers
Maximum input frequency	500 kHz
Line loading	< 2 unit loads
Line termination components	120 Ω (switchable)
Working common mode range	–7 V to +12 V

SC Hiperface (7), SC EnDat (9), SC SSI (11), SC Servo (12), SC SC (15), SC BiSS (17)	
Type	Differential voltage
Maximum Signal level	1.25 V peak to peak (sin with regard to sinref and cos with regard to cosref)
Maximum input frequency	See Table 4-23
Maximum applied differential voltage and common mode voltage range	±4 V
Resolution: The sine wave frequency can be up to 500 kHz but the resolution is reduced at high frequency. Table 4-23 shows the number of bits of interpolated information at different frequencies and with different voltage levels at the drive encoder port	

EnDat (8), SSI (10), BiSS (13)	
Type	EIA-485 differential receivers
Maximum input frequency	4 MHz
Line termination components	120 Ω (switchable)
Working common mode range	–7 V to +12 V

Resolver (14)	
Type	2 Vrms sinusoidal signal
Operating Frequency	6 – 8 kHz
Input voltage	0.6 Vrms
Minimum impedance	85 Ω

Common to All	
Absolute maximum applied voltage relative to 0V	-9 V to 14 V
Maximum differential voltage between terminals (with termination resistors enabled)	±6 V

NOTE

The position feedback input will accept 5 V TTL differential signals.

5	Z, Data, Freeze, Ref H
6	Z\, Data\, Freeze\, Ref L

AB (0), FD (1), FR (2), AB Servo (3), FD Servo(4), FR Servo (5), SC SC (15)	
Type	EIA-485 differential receivers
Maximum input frequency	512 kHz
Line loading	< 2 unit loads
Line termination components	120 Ω (switchable)
Working common mode range	–7 V to +12 V
SC Hiperface (7), SC EnDat (9), SC SSI (11), SC Servo (12), SC BiSS (17)	
Type	EIA-485 differential receivers
Maximum input frequency	4 MHz
Line termination components	120 Ω (switchable)
Working common mode range	–7 V to +12 V
EnDat (8), SSI (10)	
Type	EIA-485 differential receivers
Maximum input frequency	4 MHz
Line termination components	120 Ω (switchable)
Working common mode range	–7 V to +12 V
Resolver (14)	
Type	Differential voltage
Nominal voltage	0 – 2 Vrms depending on turns ratio
Operating frequency	6 - 8 KHz
Minimum impedance	85 Ω
Common to All	
Absolute maximum applied voltage relative to 0V	-9 V to 14 V
Maximum differential voltage between terminals (with termination resistors enabled)	±6 V

7	U, C, Not used, Not used
8	U\, C\, Not used, Not used

AB Servo (3), FD Servo(4), FR Servo (5), SC Servo (12)	
Type	EIA 485 differential receivers
Maximum input frequency	512 kHz
Line loading	1 unit load
Line termination components	120 Ω (switchable)
Working common mode range	–7 V to +12 V
SC SC (15)	
Type	Differential voltage
Maximum Signal level	1.25 V peak to peak (sin with regard to sinref and cos with regard to cosref)
Maximum input frequency	See Table 4-23
Maximum applied differential voltage and common mode voltage range	±4 V
EnDat (8), SSI (10), BiSS (13)	
Not used	
Resolver (14)	
Not used	
Common to All	
Absolute maximum applied voltage relative to 0V	-9 V to 14 V
Maximum differential voltage between terminals (with termination resistors enabled)	±6 V

9	V, D, Not used, Not used
10	V\, D\, Not used, Not used

AB Servo (3), FD Servo(4), FR Servo (5), SC Servo (12)	
Type	EIA 485 differential receivers
Maximum input frequency	512 kHz
Line loading	1 unit load
Line termination components	120 Ω (switchable)
Working common mode range	–7 V to +12 V
SC SC (15)	
Type	Differential voltage
Maximum Signal level	1.25 V peak to peak (sin with regard to sinref and cos with regard to cosref)
Maximum input frequency	See Table 4-23
Maximum applied differential voltage and common mode voltage range	±4 V
EnDat (8), SSI (10), BiSS (13)	
Not used	
Resolver (14)	
Not used	
Common to All	
Absolute maximum applied voltage relative to 0V	-9 V to 14 V
Maximum differential voltage between terminals (with termination resistors enabled)	±6 V

11	**W, Clock, Not used, Not used**
12	**W\, Clock\, Not used, Not used**

AB Servo (3), FD Servo(4), FR Servo (5), SC Servo (12)	
Type	EIA 485 differential receivers
Maximum input frequency	512 kHz
Line loading	1 unit load
Line termination components	120 Ω (switchable)
Working common mode range	–7 V to +12 V
SC EnDat (9), SC SSI (11)	
Type	Differential voltage
Maximum Signal level	1.25 V peak to peak (sin with regard to sinref and cos with regard to cosref)
Maximum input frequency	See Table 4-23
Maximum applied differential voltage and common mode voltage range	±4 V
EnDat (8), SSI (10), BiSS (13)	
Not used	
Resolver (14)	
Not used	
Common to All	
Absolute maximum applied voltage relative to 0V	-9 V to 14 V
Maximum differential voltage between terminals (with termination resistors enabled)	±6 V

Common to all Feedback types

13	**Feedback device supply**
Supply voltage	5.15 V ±2 %, 8 V ±5 % or 15 V ±5 %
Maximum output current	300 mA for 5 V and 8 V 200 mA for 15 V
The voltage on Terminal 13 is controlled by Pr **03.036**. The default for this parameter is 5 V (0) but this can be set to 8 V (1) or 15 V (2). Setting the encoder voltage too high for the encoder could result in damage to the feedback device. The termination resistors should be disabled if the outputs from the encoder are higher than 5 V.	

14	**0V Common**

15	**Motor thermistor input**
Thermistor type is selected in *P1 Thermistor Type* (**03.118**).	

Sincos encoder resolution

The sine wave frequency can be up to 500 kHz but the resolution is reduced at high frequency. Table 4-23 shows the number of bits of interpolated information at different frequencies and with different voltage levels at the drive encoder port. The total resolution in bits per revolution is the ELPR plus the number of bits of interpolated information. Although it is possible to obtain 11 bits of interpolation information, the nominal design value is 10 bits.

Table 4-23 Feedback resolution based on frequency and voltage level

Volt/Freq	1 kHz	5 kHz	50 kHz	100 kHz	200 kHz	500 kHz
1.2	11	11	10	10	9	8
1.0	11	11	10	9	9	7
0.8	10	10	10	9	8	7
0.6	10	10	9	9	8	7
0.4	9	9	9	8	7	6

4.14 Communication connections

The *Digitax HD M753* drive offers EtherCAT fieldbus communications and the *Digitax HD M751* drive offers a 2 wire EIA 485 interface. This enables the drive set-up, operation and monitoring to be carried out with a PC (Connect) or controller if required.

Figure 4-32 Location of the communication connectors

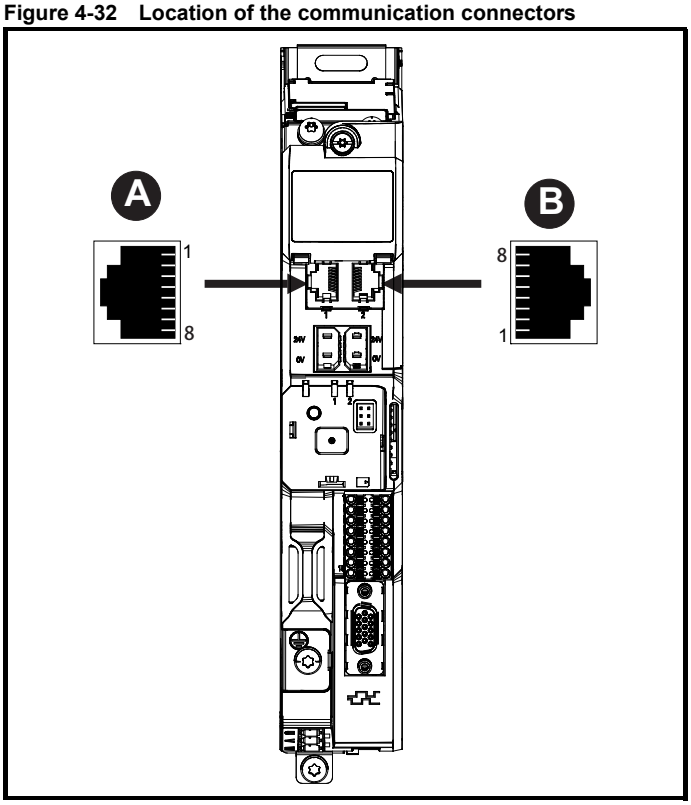

4.14.1 Digitax HD M750 Ethernet fieldbus communications

The M750 provides two RJ45 connections with an Ethernet switch for easy network creation.

Standard UTP (unshielded twisted pair) or STP (shielded twisted pair) cables are supported. It is recommended that a minimum specification CAT5e is used in new installations. As the drive supports the ‘Auto cross-over detection’ a cross-over cable is not required.

The shell of the RJ45 connector is capacitively coupled to ground.

Table 4-24 Ethernet port pin-outs

Pin	Function
1	Transmit +
2	Transmit -
3	Receive +
4	N/A
5	N/A
6	Receive -
7	N/A
8	N/A

4.14.2 Digitax HD M751 EIA 485 serial

The EIA-485 interface provides two parallel RJ45 connectors allowing easy daisy chaining, refer to Figure 4-32 *Location of the communication connectors* on page 94. The drive supports Modbus RTU protocol. See Table 4-22 for the connection details.

NOTE

Standard Ethernet cables are not recommended for use when connecting drives on a EIA-485 network as they do not have the correct twisted pairs for the pinout of the serial comms port..

CAUTION

If an Ethernet network adaptor is inadvertently connected to a *Digitax M751* EIA-485 drive, a low impedance load across the EIA-485 24 V is applied and if connected for a significant period of time can introduce the potential risk of damage.

Table 4-25 Serial communication port pin-outs

Pin	Function
1	120 Ω Termination resistor
2	RX TX
3	Isolated 0 V
4	+24 V (100 mA)
5	Isolated 0 V
6	TX enable
7	RX\ TX\
8	RX\ TX\ (if termination resistors are required, link to pin 1)
Shell	Isolated 0 V

Minimum number of connections are 2, 3, 7 and shield.

4.14.3 Digitax HD M751 Isolation of the EIA-485 serial communications port

The serial communications port is double insulated from the high voltage drive circuits and meets the requirements for PELV (Protective Extra Low Voltage) according to IEC61800-5-1. The communications ports remain referenced to other PELV rated circuits within the drive (including the control, feedback and digital I/O). Where further isolation from these PELV rated circuits is required an additional external isolation barrier will be required.

WARNING

In order to meet the requirements for SELV in IEC60950 (IT equipment) it is necessary for the control computer to be grounded. Alternatively, when a lap-top or similar device is used which has no provision for grounding, an isolation device must be incorporated in the communications lead.

An isolated serial communications lead has been designed to connect the drive to IT equipment (such as laptop computers), and is available from the supplier of the drive. See below for details:

Table 4-26 Isolated serial comms lead details

Part number	Description
4500-0096	USB / EIA485 Communications Converter Cable Cable

The “isolated serial communications” lead has reinforced insulation as defined in IEC60950 for altitudes up to 3,000 m.

4.14.4 Communication networks and cabling

Any isolated signal circuit has the capability to become live through accidental contact with other conductors; as such they should always be double-insulated from live parts. The routing of network and signal wires should be done so as to avoid close proximity to mains voltage cabling.

4.14.5 *Digitax M753* EtherCAT fieldbus communications

The *Digitax M753* has two RJ45 Ethernet ports for the EtherCAT network, refer to Figure 4-32 *Location of the communication connectors*.

A: EtherCAT port 1.

B: EtherCAT port 2.

Cables should be shielded and as a minimum, meet TIA Cat 5e requirements.

The shell of the RJ45 connector is capacitively coupled to ground.

Table 4-27 EtherCAT terminal descriptions

Pin	EtherCAT port 1 - IN	Pin	EtherCAT port 2 - OUT
1	Transmit +	1	Transmit +
2	Transmit -	2	Transmit -
3	Receive +	3	Receive +
4	Not used	4	Not used
5	Not used	5	Not used
6	Receive -	6	Receive -
7	Not used	7	Not used
8	Not used	8	Not used

4.15 Safe Torque Off (STO)

The Safe Torque Off function provides a means for preventing the drive from generating torque in the motor, with a very high level of integrity. It is suitable for incorporation into a safety system for a machine. It is also suitable for use as a conventional drive enable input.

The safety function is active when the STO input is in the logic-low state as specified in the control terminal specification. The function is defined according to EN 61800-5-2 and IEC 61800-5-2 as follows. (In these standards a drive offering safety-related functions is referred to as a PDS(SR)):

'Power that can cause rotation (or motion in the case of a linear motor) is not applied to the motor. The PDS(SR) will not provide energy to the motor which can generate torque (or force in the case of a linear motor)'

This safety function corresponds to an uncontrolled stop in accordance with stop category 0 of IEC 60204-1.

The Safe Torque Off function makes use of the special property of an inverter drive with an induction motor, which is that torque cannot be generated without the continuous correct active behaviour of the inverter circuit. All credible faults in the inverter power circuit cause a loss of torque generation.

Note on the use of servo motors, other permanent-magnet motors, reluctance motors and salient-pole induction motors:

When the drive is disabled through Safe Torque Off, a possible (although highly unlikely) failure mode is for two power devices in the inverter circuit to conduct incorrectly.

This fault cannot produce a steady rotating torque in any AC motor. It produces no torque in a conventional induction motor with a cage rotor. If the rotor has permanent magnets and/or saliency, then a transient alignment torque may occur. The motor may briefly try to rotate by up to 180° electrical, for a permanent magnet motor, or 90° electrical, for a salient pole induction motor or reluctance motor. This possible failure mode must be allowed for in the machine design.

The Safe Torque Off function is fail-safe, so when the Safe Torque Off input is disconnected the drive will not operate the motor, even if a combination of components within the drive has failed. Most component failures are revealed by the drive failing to operate. Safe Torque Off is also independent of the drive firmware. This meets the requirements of the following standards, for the prevention of operation of the motor.

Machinery Applications

The Safe Torque Off function is suitable for use as a safety component of a machine:

Safety Parameters

According to IEC 61508-1 to 7 / EN 61800-5-2 / EN 62061

Type	Value	Percentage of SIL 3 allowance
Proof test interval	20 years	
High demand or a continuous mode of operation		
PFH (1/h)	4.21×10^{-11} 1/h	< 1 %
Low demand mode of operation (not EN 61800-5-2)		
PFDavg	3.68×10^{-6}	< 1 %

According to EN ISO 13849-1

Type	Value	Classification
Category	4	
Performance Level (PL)	e	
$MTTF_D$ (STO1)	> 2500 years	High
$MTTF_D$ (STO2)	> 2500 years	High
$MTTF_D$ (Single channel STO)	> 2500 years	High
DC_{avg}	≥ 99 %	High
Mission time	20 years	

NOTE

Logic levels comply with IEC 61131-2:2007 for type 1 digital inputs rated at 24 V. Maximum level for logic low to achieve SIL3 and PL e 5 V and 0.5 mA.

Two-channel Safe Torque Off

Models Digitax HD M75X have dual channel STO.

The dual channel STO has two fully independent channels.

Each input meets the requirements of the standards as defined above.

If either or both inputs are set at a logic low state, there are no single faults in the drive which can permit the motor to be driven.

It is not necessary to use both channels to meet the requirements of the standards. The purpose of the two channels is to allow connection to machine safety systems where two channels are required, and to facilitate protection against wiring faults.

For example, if each channel is connected to a safety-related digital output of a safety related controller, computer or PLC, then on detection of a fault in one output the drive can still be disabled safely through the other output.

Under these conditions, there are no single wiring faults which can cause a loss of the safety function, i.e. inadvertent enabling of the drive.

In the event that the two-channel operation is not required, the two inputs can be connected together to form a single Safe Torque Off input.

One-channel Safe Torque Off (Including Two- channel Safe Torque off with the inputs connected together.)

In a single channel Safe torque Off application there are no single faults in the drive which can permit the motor to be driven. Therefore it is not necessary to have a second channel to interrupt the power connection, nor a fault detection circuit.

It is important to note that a single short-circuit from the Safe Torque Off input to a DC supply of > 5 V could cause the drive to be enabled.

This might occur through a fault in the wiring. This can be excluded according to EN ISO 13849-2 by the use of protected wiring. The wiring can be protected by either of the following methods:

- By placing the wiring in a segregated cable duct or other enclosure.

Or

- By providing the wiring with a grounded (0V of the Drive) shield in a positive-logic grounded control circuit. The shield is provided to avoid a hazard from an electrical fault. It may be grounded by any convenient method; no special EMC precautions are required.

Note on response time of Safe Torque Off, and use with safety controllers with self-testing outputs:

Safe Torque Off has been designed to have a response time of greater than 1 ms so that it is compatible with safety controllers whose outputs are subject to a dynamic test with a pulse width not exceeding 1 ms.



The design of safety-related control systems must only be done by personnel with the required training and experience. The Safe Torque Off function will only ensure the safety of a machine if it is correctly incorporated into a complete safety system. The system must be subject to a risk assessment to confirm that the residual risk of an unsafe event is at an acceptable level for the application.



Safe Torque Off inhibits the operation of the drive, this includes inhibiting braking. If the drive is required to provide both braking and Safe Torque Off in the same operation (e.g. for emergency stop) then a safety timer relay or similar device must be used to ensure that the drive is disabled a suitable time after braking. The braking function in the drive is provided by an electronic circuit which is not fail-safe. If braking is a safety requirement, it must be supplemented by an independent fail-safe braking mechanism.



Safe Torque Off does not provide electrical isolation. The supply to the drive must be disconnected by an approved isolation device before gaining access to power connections.



It is essential to observe the maximum permitted voltage of 5 V for a safe low (disabled) state of Safe Torque Off. The connections to the drive must be arranged so that voltage drops in the 0V wiring cannot exceed this value under any loading condition. It is strongly recommended that the Safe Torque Off circuit be provided with a dedicated 0V conductor which should be connected to either terminals 1, 3, 4, 5, 7 or 15 at the drive.

Safe Torque Off over-ride

The drive does not provide any facility to over-ride the Safe Torque Off function, for example for maintenance purposes.

Lift (Elevator) Applications

The Safe Torque Off function is suitable for use as a safety component in lift (elevator) applications:

The Safe Torque Off function can be used to eliminate electro-mechanical contactors, including special safety contactors, which would otherwise be required for safety applications.

For further information, contact the supplier of the drive.

5 Multi axis system design

There are a number of important considerations for multi axis systems, it is recommended that the design process follows the following method:

1. Determine the power profile of the system and select the most appropriate parallel DC bus, drive and motor configuration to meet the demands of the power profile (refer to section 5.1 below).

2. Assess DC bus paralleling connection method, external 24 Vdc, dynamic braking, EMC filter and fieldbus communication requirements, refer to section 5.2 *DC bus paralleling connection method* on page 105 to section 5.6 *EMC filters for multi axis systems* on page 110.

3. Choose the mechanical installation method, refer to section 5.7 *Multi axis system installation* on page 111.

An example applying these steps is given in section 5.8 *Example design of a multi axis system* on page 114.

5.1 Multi axis system power profile and configuration

The power profile of one complete worst case cycle should be calculated in watts from the product of rated speed (radians/sec) and torque (Nm) for each axis. The sum total instantaneous power of the all axis over one complete duty cycle should also be calculated.

Individual drives should be selected to meet the power requirements of each axis.

The power profile of the whole system (including all axis) should be used to determine which DC paralleling configuration is the most suitable.

5.1.1 DC bus paralleling configuration

Connecting the DC links of several drives together allows regenerated/braking energy from one drive to be re-used by another motoring drive. This improves the efficiency of the system since the regenerated energy is not wasted in braking resistors and the motoring drive draws substantially less power from the mains. This can be particularly advantageous where one or more drives may be 'holding back' a line to provide tension. It is often applied in high performance servo drive applications where substantial amounts of energy is used in accelerating and braking motors/machines.

As well as offering advantages in terms of simplifying energy management, a common DC bus system also has the potential to simplify the mains connections and protection.

The following parallel DC bus configurations cover single AC mains feed only.

There are a number of different ways of connecting Digitax HD M75X drives together and paralleling the DC bus.

5.1.2 DC paralleling using a Digitax HD M75X rectifier to provide the DC supply

In this configuration multiple drives can be connected together via a parallel DC bus from a single AC feed to create a frame block (a group of drives connected to a common DC bus without any fuses between drives). A frame block can be comprised of Digitax HD M75X series drives of different frame sizes and current ratings.

NOTE

Drives of different voltage ratings cannot be mixed on the same frame block.

NOTE

Only one AC input should be connected to a system using a common DC bus.

Figure 5-1 Digitax M75X AC fed mixed frame block (DC bus terminal covers removed for illustration)

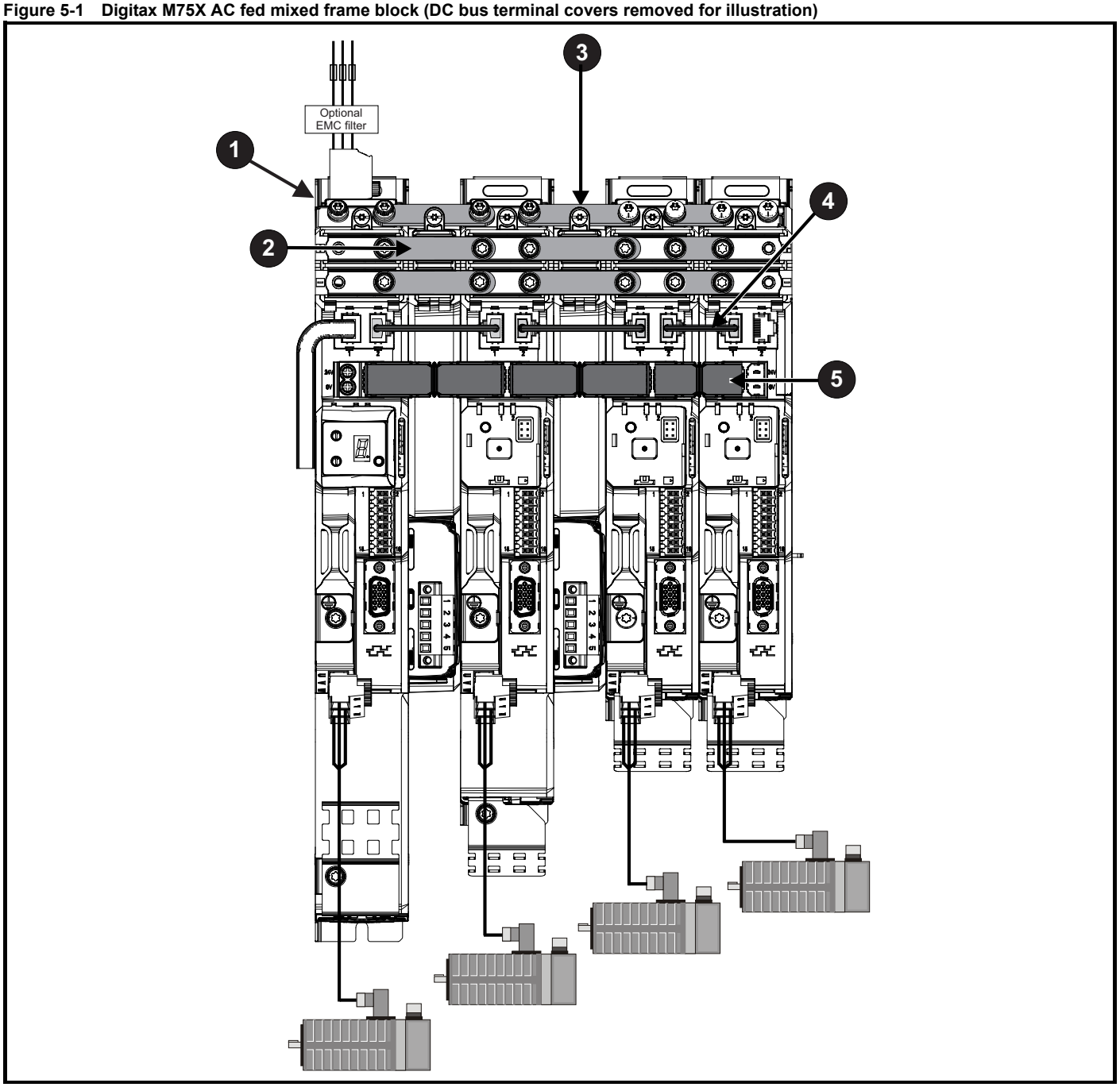

1. Digitax M75X rectifier supplying a parallel DC bus.

2. DC busbars (supplied with Multi axis kits).

3. Ground busbar (supplied with Multi axis kits).

4. Communications link (supplied with Multi axis kits).

5. 24 Vdc link (supplied with Multi axis kits).

Two multi axis kit variants are available from the supplier of the drive; (i) for drives without SI-Option Module Mounting kit fitted or (ii) for drives with SI-Option Module Mounting kit fitted.

Refer to section 2.10.1 *Installation and system accessory kits available with Digitax HD M75X series* for more information on multi axis kits.

Maximum frame block size

The maximum size of any Digitax HD M75X frame block configuration is 10 drives but may be reduced depending on the maximum frame block capacitance that a Digitax HD M75X rectifier can support.

Maximum continuous input power

Each Digitax HD M75X series drive has an internal rectifier which has been designed to allow more input power than a single axis drive needs. This additional power capability provides a useful method to provide a DC supply for additional drives connected via a common DC bus. The maximum input power depends on the frame size and voltage rating.

Each Digitax M75X drive has its own inrush current limitation circuit; therefore no additional inrush circuit is required.

The worst case output power requirement for the whole system must be compared with the maximum continuous AC input power of the drive chosen with the AC connection (Digitax HD M75X rectifier), refer to Table 5-1 *Multi axis input ratings*.

To prevent the Digitax HD M75X rectifier from being overloaded, the worst case system output power demand from all axes, must not exceed the maximum continuous AC input power of the Digitax HD M75X rectifier at any time.



The drive with the input supply will trip if its maximum input power is exceeded. Input power will not be disconnected following a trip however, to protect the input drive all load must be removed by disabling all other drives fed from the rectifier of the input drive under a trip condition.

Where the maximum continuous AC input power of the Digitax HD M75X rectifier is exceeded, additional frame blocks will be required with separate AC feeds.

Maximum frame block capacitance

When creating a frame block with Digitax HD M75X drives of multiple frame sizes, the maximum frame block capacitance (b) that the Digitax HD M75X rectifier can support should be greater than the sum of all the individual internal drive DC capacitance values (a) within the same frame block.

Table 5-1 Multi axis input ratings

Digitax HD M75 X frame size	Voltage range	Max continuous AC input power	Maximum input current	Internal drive DC capacitance (a)	Maximum frame block capacitance when AC source (b)
		kW	A	uF	uF
1	200 V	4	23.2	580	5800
2		5.3	35.4	1160	4640
3		6.3	37.9	1880	3760
		10*	37.9		37600
1	400 V	6.5	23.9	110	1900
2		8.7	34.5	290	2030
3		10	39.1	470	2210
		13*	39.1		9400

* A suitably rated 480 µH (or higher) input inductor can be used to extend the power rating of the drives. An input inductor is available from the supplier of the drive (up to 32 A), refer to Table 5-2.

Table 5-2 Digitax M75X input inductor

Part number	Input inductor designation	Input inductor current rating	Input inductor overload	Inductance	Weight	Length	Width	Height
		A	A	mh	kg	mm	mm	mm
4401-0236	INL4013	32	64 (60 sec)	0.48	4.9	102	156	146

Input cable and fusing

No supplemental DC fuses are required for this type of configuration.

When a Digitax HD M75X drive is used as an AC supply for a frame block, only AC branch protection fuses are required. The maximum fuse which can be used to protect the system is given in Table 5-3. Smaller fuses and input cables can be used provided the fuse is from the same range and dimensioned for the required input power. If the input cable is smaller than that listed in Table 5-3 the protection fuse must be reduced accordingly.

Table 5-3 Maximum AC fuse and minimum cable size for AC converter

Model	Fuse rating	Fuse rating	Input cable size	
	IEC class gG	IEC class J	mm^2	AWG
All	40	40	6	8

When the AC output power is known, the following formula can be used to estimate the input current for cable and fuse selection.

Input current (A)= a x $P(kW)^2$+b x P(kW)+c

Where constants a, b and c are given in Table 5-4:

Table 5-4 Input current equation constants

Constant	All 200 V drives, 3 phase	Frame 1 - 400 V drives, 3 phase	Frame 2 & 3 - 400 V drives, 3 phase	All 200 V drives, single phase
a	-0.55	-0.2	-0.2	-0.5
b	9.7	4.905	6	11
c	0.2	0.4968	0.5	0

5.1.3 DC paralleling using a rectifier stack or a Unidrive M to provide the DC supply

Where the required system output power demand from all axes exceeds the rating of a Digitax HD and it is not suitable to divide the system into individual frame blocks, an external rectifier stack a larger drive from the Unidrive M range can be used to supply power to the common DC bus.

There are a number of advantages in using this method of DC paralleling:

- Allows drives of different frame sizes to be connected together.
- Reduces AC supply side component parts.
- Reduces energy losses (heat loss from braking resistors).

NOTE

Drives of different voltage ratings cannot be mixed on the same common DC bus.

NOTE

Only one AC input should be connected to a system using a common DC bus.

Using a rectifier stack or a Unidrive M to provide the DC supply can be acheived via a fused common DC bus or in some circumstances using an unfused frame block configuration, both options are detailed below.

Frame block configuration

When Unidrive M Frame sizes 3 to 6 are used as the AC input for the frame block containing Digitax HD no supplemental DC fuses are required to protect the system, provided the design meets the criteria outlined below. Busbar connection kits are available for simple and space saving connections between these drives, see Table 5-12.

When selecting a Unidrive M to act as the frame block rectifier ensure the design meets the following criteria:

i) Input stage continuous power

Each Digitax HD M75X and Unidrive M Frame 3 to 6 has its own inrush current limitation circuit; therefore no additional inrush circuit is required.

The worst case output power requirement for the whole system must be compared with the Unidrive M continuous power rating of the drive chosen with the AC connection, refer to Table 5-5 *Unidrive M AC input stage ratings*.

To prevent the input stage rectifier from being overloaded, the worst case system peak output power demand from all axis must not exceed the maximum continuous power rating of the input stage.

Where the Unidrive M input stage continuous power rating is exceeded, additional frame blocks will be required with separate AC feeds.

Table 5-5 Unidrive M AC input stage ratings

Unidrive M model	Voltage range	Max continuous AC input power	Internal drive DC capacitance	Maximum frame block capacitance
		kW	uF	uF
3200050	200 V	3	1560	3510
3200066		3	1560	3510
3200080		3	1560	3510
3200106		3	1560	3510
4200137		5.5	1760	4140
4200185		5.5	1760	4140
5200250		7.5	1560	4680
6200330		15	3000	7500
6200440		15	3000	7500

3400025		3	220	3510
3400031		3	220	3510
3400045		3	220	3510
3400062		3	390	3510
3400078		5.5	390	3510
3400100		5.5	390	3510
4400150	400 V	11	660	4140
4400172		11	660	4140
5400270		15	780	4680
5400300		15	780	4680
6400350		30	1500	7500
6400420		30	1500	7500
6400470		30	1500	7500

ii) Maximum frame block capacitance - rectifier

Ensure the sum of all the individual internal DC capacitance values of all drives connected to the common DC bus does not exceed the maximum frame block capacitance that the Unidrive M input stage can support.

When creating a frame block with Unidrive M and Digitax HD M75X drives of multiple frame sizes, the maximum frame block capacitance that the Unidrive M input stage can support should be greater than the sum of all the individual internal drive DC capacitance values in the frame block. Refer to Table 5-5 for Unidrive M maximum frame block capacitance.

If more drives are required for an application than a single frame block capacitance will allow, then multiple separate frame blocks each with an individual rectifier can be created.

iii) Maximum frame block capacitance - inverters

The maximum frame block capacitance thresholds set out in Table 5-1 *Multi axis input ratings* and Table 5-5 *Unidrive M AC input stage ratings* dictate the number of drives that can be connected to the frame block without supplemental DC fusing. Ensure the sum of all the individual internal DC capacitance values of all drives connected to the common DC bus does not exceed any individual drive maximum frame block capacitance.

If more drives are required for an application than a single frame block capacitance will allow, then multiple separate frame blocks each with an individual rectifier can be created or multiple separate frame blocks connected to a common DC bus via supplemental fusing can be created if the rectifier is suitably sized to support it.

iv) Branch fuse and input cable selection

The maximum AC branch fuse rating which can be used to protect the system is given in Table 5-6. Smaller fuses and input cables can be used provided the fuse is from the same range and dimensioned for the required input current.

Table 5-6 Branch fuse selection

		AC line fuse	Cable size	
			(IEC) mm²	(UL) AWG
Unidrive M input stage	Unidrive M Frame 3	Class J/ gG 25 A	4	10
	Unidrive M Frame 4	High speed class J /gR 30 A	8	8
	Unidrive M Frame 5	High speed class J /gR 40 A	10	8
	Unidrive M Frame 6	High speed class J /gR 60 A	25	3

NOTE

The drive with the largest power rating must always be the rectifier drive.

NOTE

When using the Unidrive M frame 6 DC busbar adapter kit, the smaller drives must be located on the left hand side of the frame 6 drive.

Unidrive M (frame 3 to 6) and Digitax HD mixed frame block example

A four axis system is proposed using the drives detailed in Table 5-7. The Unidrive M frame 6 will act as the input stage to the frame block.

M700-06400470 operates all of the time with a 15 kW output power demand.

3 x M750-01400042 operate with worst case combined peak output power demand of 13.5 kW.

Figure 5-2 Unidrive M (frame 3 to 6) and Digitax HD mixed frame block

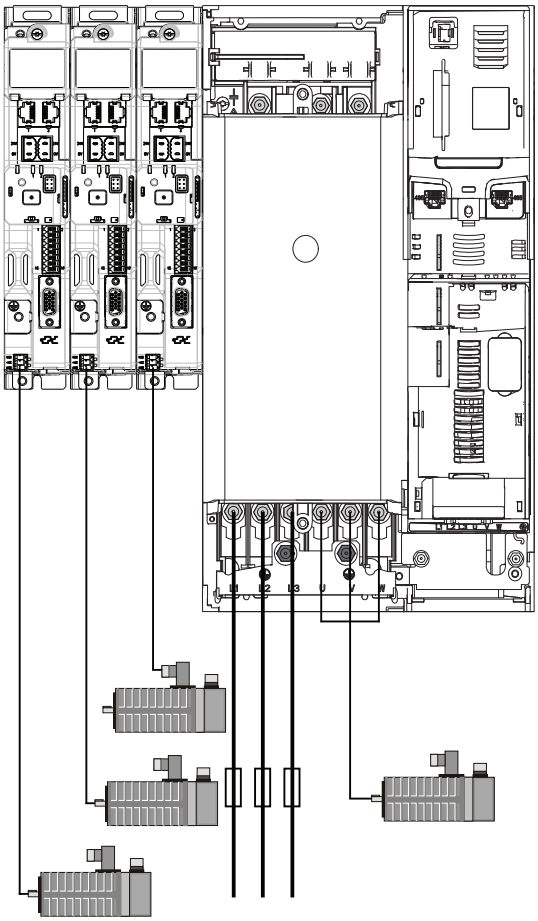

Input stage continuous power

The Unidrive M frame 6 400 V input stage can supply 30 kW on a continuous basis

M700-06400470 output power demand = 15 kW

3 x M750-01400042 combined peak output power demand = 13.5 kW

Unidrive M frame 6 400 V input stage (30 kW) > worst case peak power demand (28.5 kW)

Maximum frame block capacitance – rectifier

Table 5-7 Drive and frame block capacitance

Axis	Internal drive DC capacitance	Maximum frame block capacitance supported
Axis A M700-06400470	1500 uF	7500 uF
Axis B M750-01400042	110 uF	1900 uF
Axis B M750-01400042	110 uF	1900 uF
Axis B M750-01400042	110 uF	1900 uF
Total system capacitance	1830 uF	

Unidrive M frame 6 maximum frame block capacitance (7500 uF) > total frame block capacitance (1830 uF)

Therefore the Unidrive M frame 6 input stage can support the total frame block capacitance.

Maximum frame block capacitance – inverter

Smallest individual drive maximum frame block capacitance (M750-01400042) =1900 uF

Total frame block capacitance = 1830 uF

Therefore no individual drive maximum frame block capacitance is exceeded and no supplemental DC fusing is required.

Table 5-8 Branch fuse and input cable selection to Unidrive M input stage

Uni M input stage	AC line fuse	Cable size	
		(IEC) mm²	(UL) AWG
Unidrive M Frame 6	High speed class J /gR 60 A	25	3

Fused common DC bus

i) Input stage continuous power

The worst case output power requirement for the whole system must be compared with the Unidrive M continuous power rating of the drive chosen with the AC connection, refer to Table 5-5 *Unidrive M AC input stage ratings* or an external rectifier must be sized to ensure that it can supply enough power for the motion profile required of the drive system.

To prevent the input stage rectifier from being overloaded, the worst case system peak output power demand from all axis must not exceed the maximum continuous power rating of the input stage.

When the parallel DC bus consists of a mix of frame sizes, the largest frame size should be chosen as the input stage rectifier drive.

ii) Maximum frame block capacitance - rectifier

The maximum frame block capacitance that the Unidrive M input stage can support should be greater than the sum of all the individual internal drive DC capacitance values within the same frame block. Refer to Table 5-7 for Unidrive M maximum frame block capacitance.

If more drives are required for an application than a single frame block will allow, then multiple separate frame blocks each with an individual rectifier can be created or a higher power rectifier drive should be considered.

Each Digitax HD M75X has its own inrush current limitation circuit, however when using an external rectifier the total inrush current must still be checked to ensure it remains within the I^2t limit of the bridge rectifier connected to the AC supply.

In order to ensure the rectifier can withstand the inrush current the rectifier I^2t must be checked using the following equation:

Rectifier $I^2t > (2/3 \times \text{peak inrush current})^2 \times 10$ ms

Digitax HD peak inrush current values are listed in section 6.1.23 *Input current, fuse and cable size ratings* on page 129.

iii) Maximum frame block capacitance - inverter

When Digitax HD inverters are protected by DC fuses the maximum frame block capacitance can be increased as detailed in Table 5-1.

Ensure the sum of all the individual internal DC capacitance values of all drives connected to the common DC bus does not exceed any individual drive maximum frame block capacitance.

iv) Frame block DC supply fusing

Where a Digitax HD inverter frame block is connected to a common DC bus fed from a Unidrive M frame 7 or larger the DC supply must be connected via supplemental fuses, as showing in Figure 5-3 below. Supplemental fuses must also be fitted where multiple frame blocks are connected to a common DC bus and the total DC bus capacitance exceeds the individual maximum frame block capacitance threshold for any inverter connected to the common bus. The maximum DC fuse rating for a Digitax HD frame block is given in Table 5-8 below, where the DC current for a given frame block exceeds this maximum value a separate fused frame block should be established.

Table 5-9 Digitax HD maximum DC fuse rating

Model	Fuse rating	Max fuse clearing I^2t at operating condition
	A	kA^2s
All	63	3.08

DC fuses suitable for the Digitax HD range are given in Table 5-10.

Table 5-10 Digitax HD supplemental DC fuse list

Manufacturer	Type
Mersen	A70QS (14 x 52)/(22 x 58)
	FR14/FR22 (14x52)/(22x58)
	A070 URD
Siba	URDC (NH000)
	URZ (14x51)
Bussman	FWP(14x51)/(22x58)
Littlefuse	LA70QSF (14x51)/(22x58)
	LA70QSF (stud tabs)

When the drive acting as the input stage for a common DC bus is supplying a mix of Unidrive M as well as Digitax HD inverters it may be necessary for the input stage drive supplying the DC bus to be fitted with DC fuses. Contact the supplier of the drive for more information.

v) Branch fuse and input cable selection

Refer to the respective Unidrive M power installation guide for Unidrive M frame 7 to 11 AC branch fuse and cable rating.

When using an external rectifier stack to supply the common DC bus refer to the rectifier manufacturer's recommendations regarding fusing/ protection requirements.

Figure 5-3 Unidrive M (frame 7 to 11) and Digitax HD mixed frame block

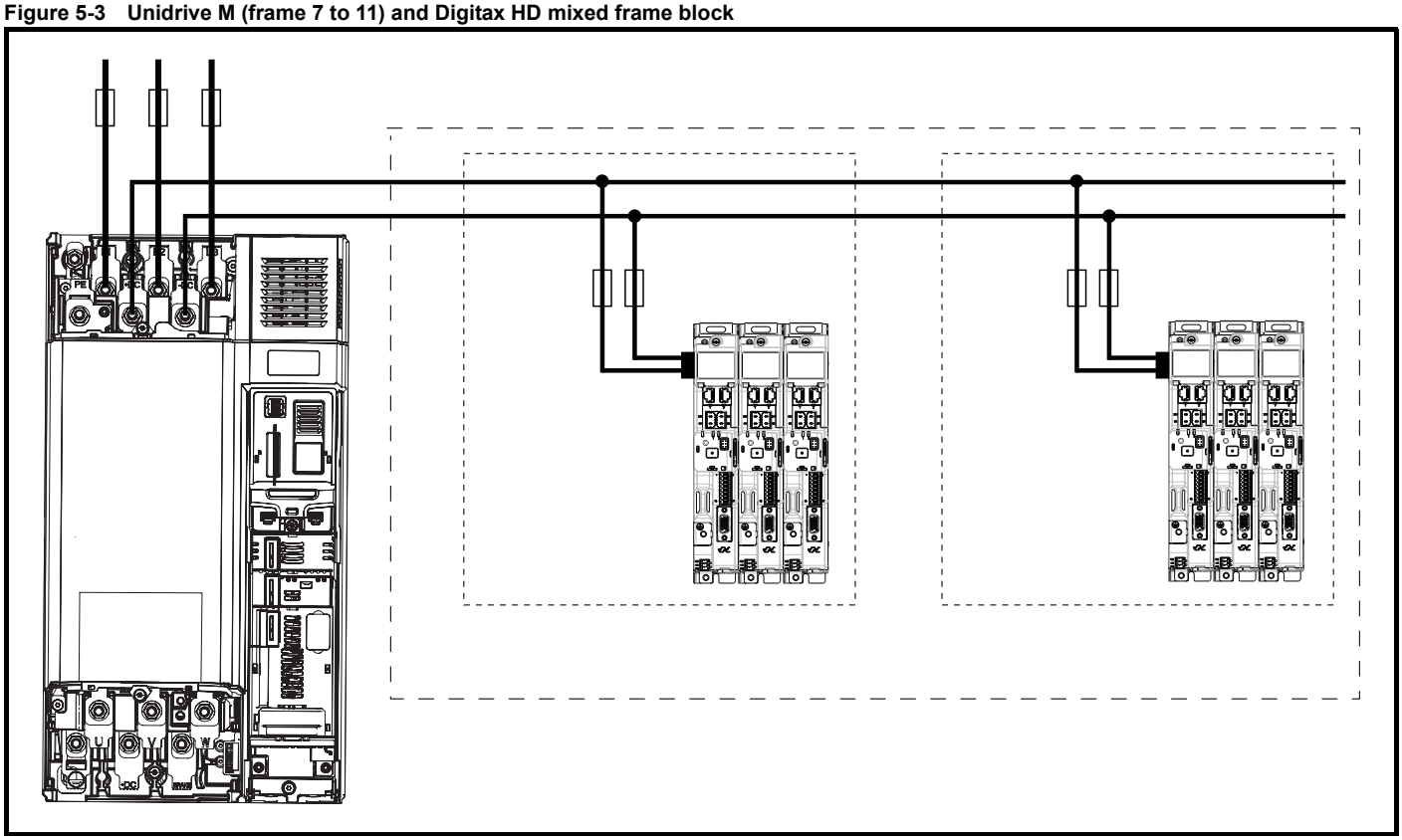

1. Frame block size dictated by capacitance limit of smallest drive
2. Rectifier size dictated by total frame block capacitance.

5.2 DC bus paralleling connection method

DC bus paralleling using standard cable/busbars is supported by all frame sizes in the Digitax HD M75X range.

5.2.1 DC paralleling with busbars

The terminal and enclosure design enables the DC bus of a number of drives to be connected together using pre-made busbars. Suitable busbar links for DC paralleling are included in multi axis kits available from the supplier of the drive; refer to Table 5-11 *Multi axis kit part numbers*.

Table 5-11 Multi axis kit part numbers

Model	Description	Part number
All	Multi axis kit (standard - no option module)	9500-1047
	Multi axis kit (with option module)	9500-1048

Multi axis kits are not supplied with the drive but available to order from the supplier of the drive.

The diagram below shows how the DC and ground busbar links should be used to connect several drives together. For access to the drive DC bus terminal refer to section 4.3.1 *DC terminal cover access/removal* on page 60.

Figure 5-4 Parallel DC bus and ground connections using busbar links (DC bus cover removed for clarity)

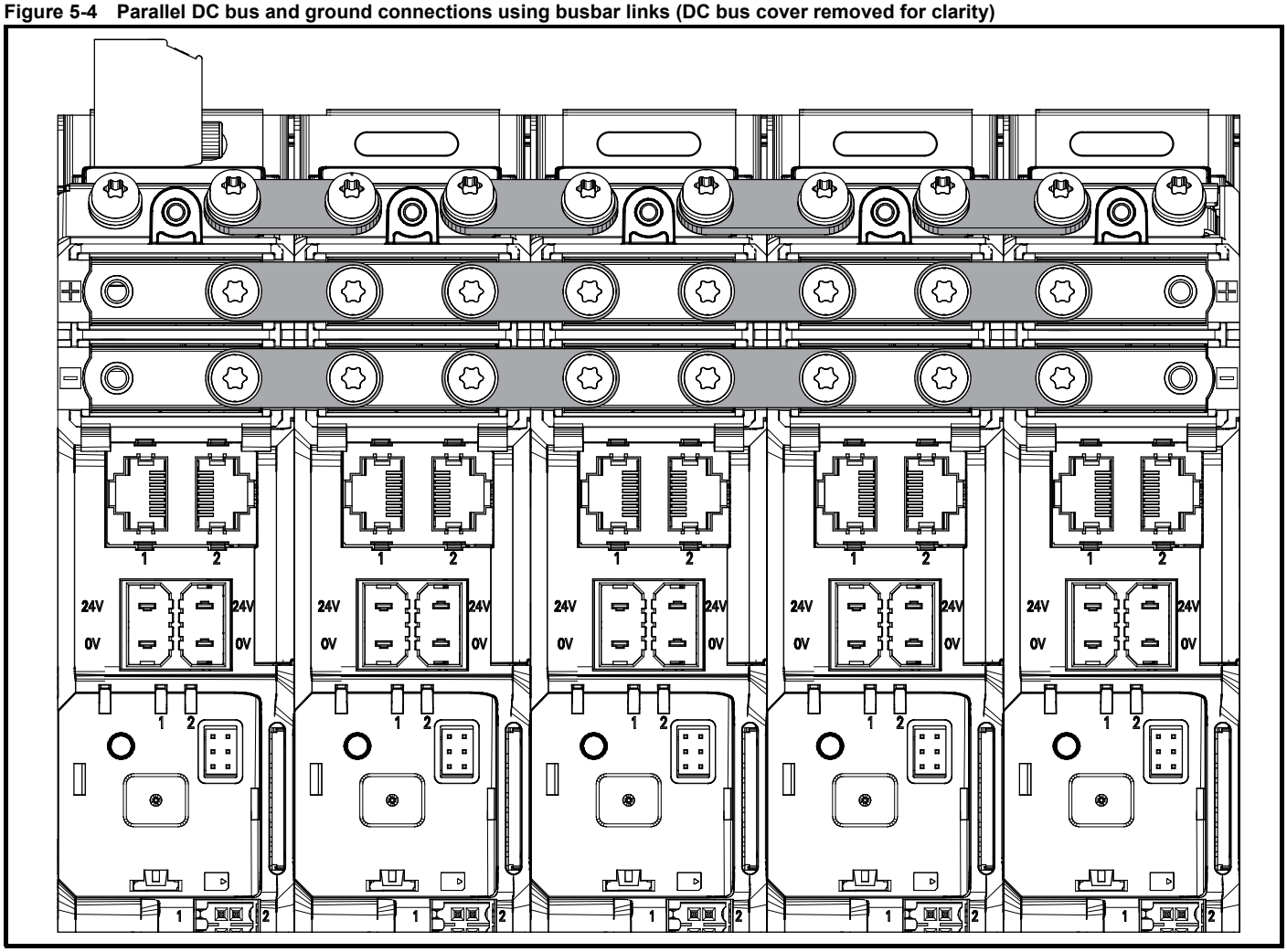

NOTE

The DC busbar system is rated at 60 A continuous.

NOTE

DC terminal cover breakout tabs must not be removed when connecting multi axis drives using pre-made busbars supplied in the multi axis kits.

Table 5-12 Unidrive M to Digitax HD DC busbar adapter kits

Description	Part number
Surface mounted Unidrive M Frame 3 to 5 to Digitax HD kit	3470-0146
Through hole mounted Unidrive M Frame 3 to 5 to Digitax HD kit	3470-0147
Surface mounted Unidrive M Frame 6 to Digitax HD kit	3470-0148
Through hole mounted Unidrive M Frame 6 to Digitax HD kit	3470-0149

5.2.2 DC paralleling with cables

DC supply cables up to 6 mm² (AWG 10) can be connected directly to the DC terminals with a suitably insulated M4 ring crimp. The DC terminal cover breakout tab (**1**) only needs to be removed when a DC drive supply is made with cable connections. DC terminal cover breakout tabs do not need to be removed when connecting multi axis drives using pre-made busbars supplied in the multi axis kits.

Figure 5-5 DC supply connections and cable routing

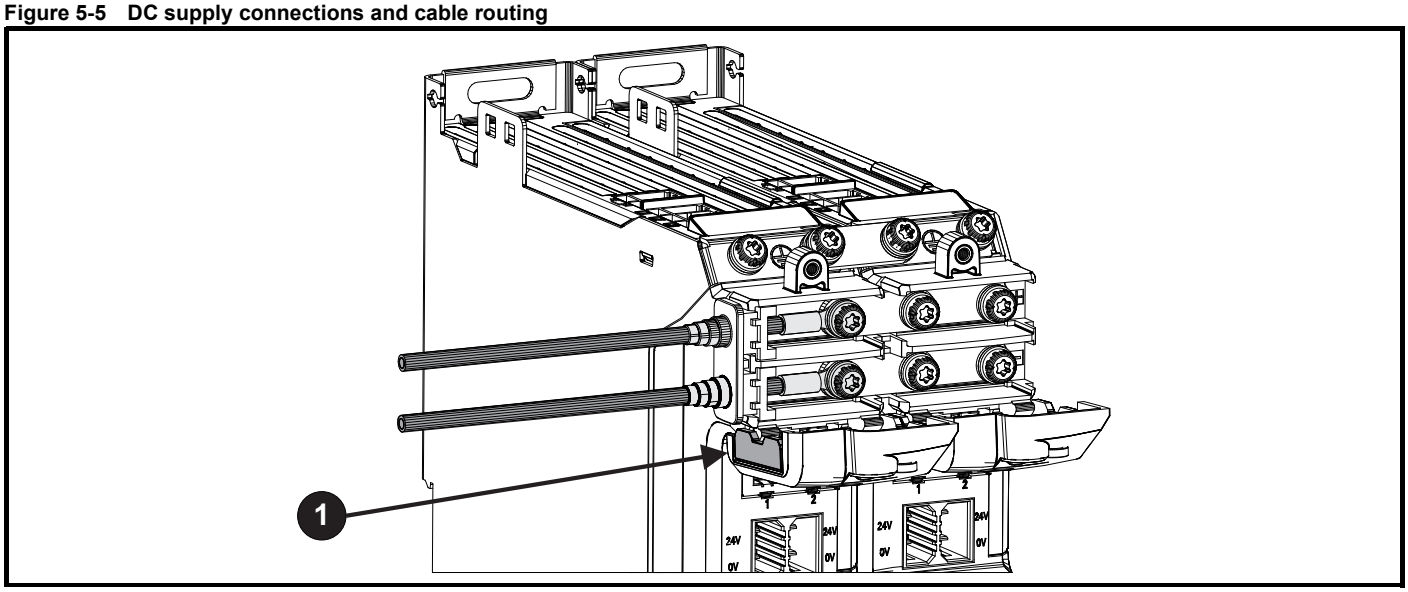

WARNING

DC cable grommets must be fitted when DC terminal cover breakout tabs are removed. Suitable grommets are available from the supplier of the drive. Refer to section 2.10.1 *Installation and system accessory kits available with Digitax HD M75X series* on page 16.

Larger external DC supply cables for multi axis installations (6 mm² to 16 mm²) can be accommodated using an external DC bus cable connection kit; refer to section 2.10.1 *Installation and system accessory kits available with Digitax HD M75X series* on page 16.

Figure 5-6 External DC bus cable connection kit - Installation step 1

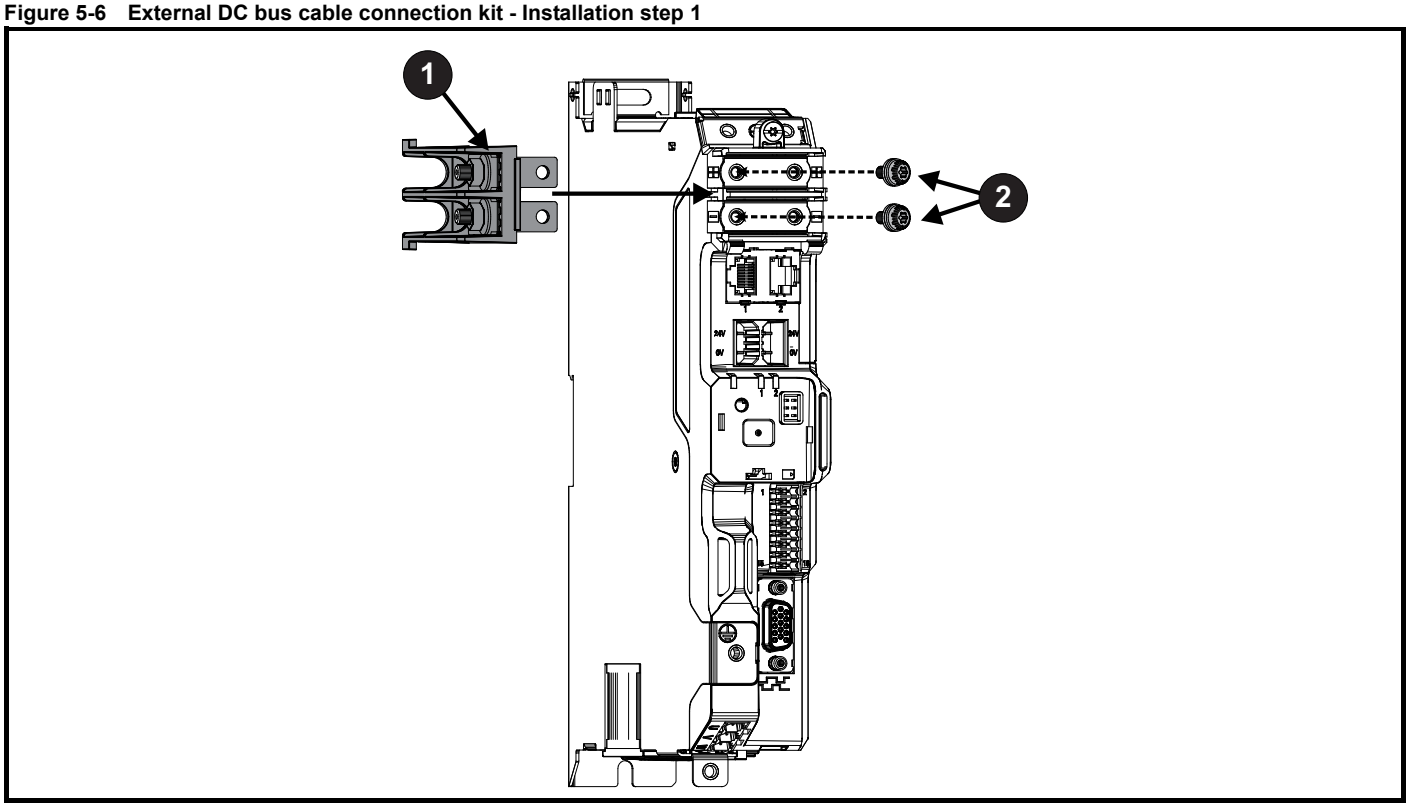

- Attach the base assembly of the External DC bus cable connection kit to the drive (**1**).
- Secure the DC busbar terminals with the M4 screws (**2**) supplied with the drive.

Figure 5-7 External DC bus cable connection kit - Installation step 2

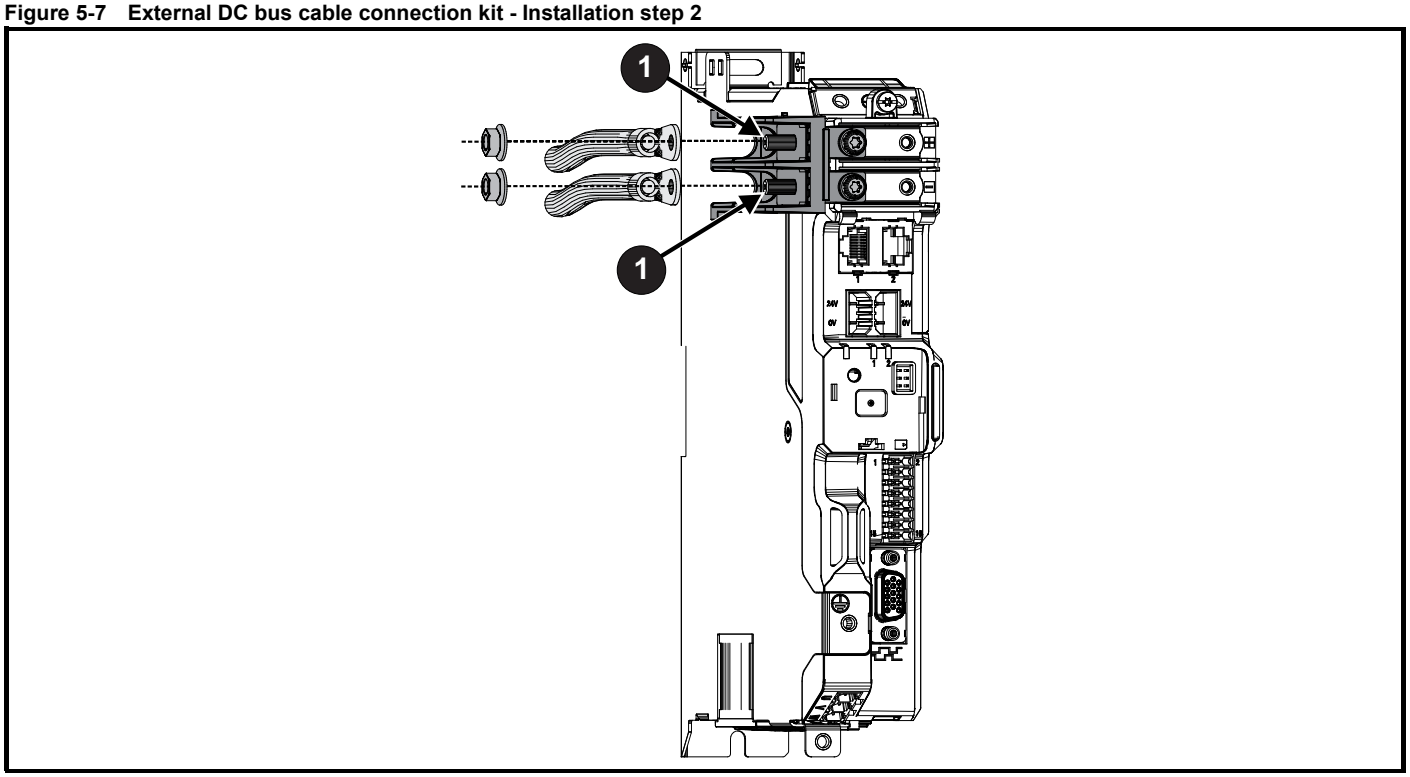

- Connect the DC cables to the terminal studs of the External DC bus cable connection kit (**1**) and secure using the M5 nuts provided. Tools required - M8 socket and torque wrench, torque 4 N m (35.4 lb in).

Figure 5-8 External DC bus cable connection kit - Installation step 3

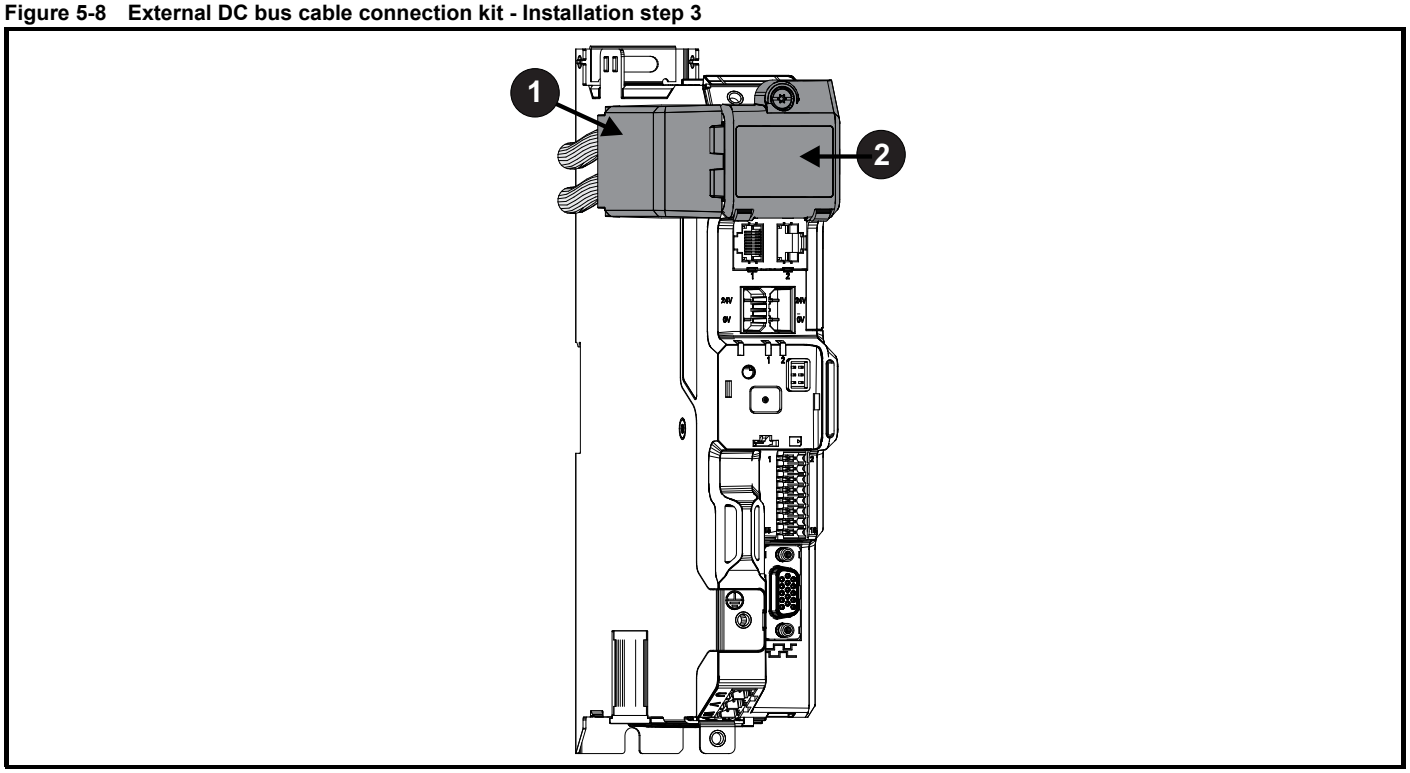

- Slide the DC bus cable connection cover into position (**1**) and secure the DC terminal cover.

Where a single AC feed is used to supply multiple drives DC paralleled via cables, the AC supply fuses will also protect the DC supply cables if the DC cables are rated for the AC fuse current rating multiplied by a factor to account for the difference between AC and DC supply current.

The DC cables should be rated for the AC fuse rating x 1.25.

Where this is not possible, additional protection for the DC cables should be considered.

5.3 External 24 Vdc supply requirements for multi axis systems

External 24 Vdc link

For a multi axis system, the installation time and cable requirements can be reduced by using the 24 V links supplied in each multi axis kit. Each kit includes one 24 Vdc busbar link which provides a quick method of connecting 24 Vdc between 2 drives.

NOTE

A maximum of 10 drives can be connected together using 24 V links.

Figure 5-9 24 V busbar link (multi axis kit with option module)

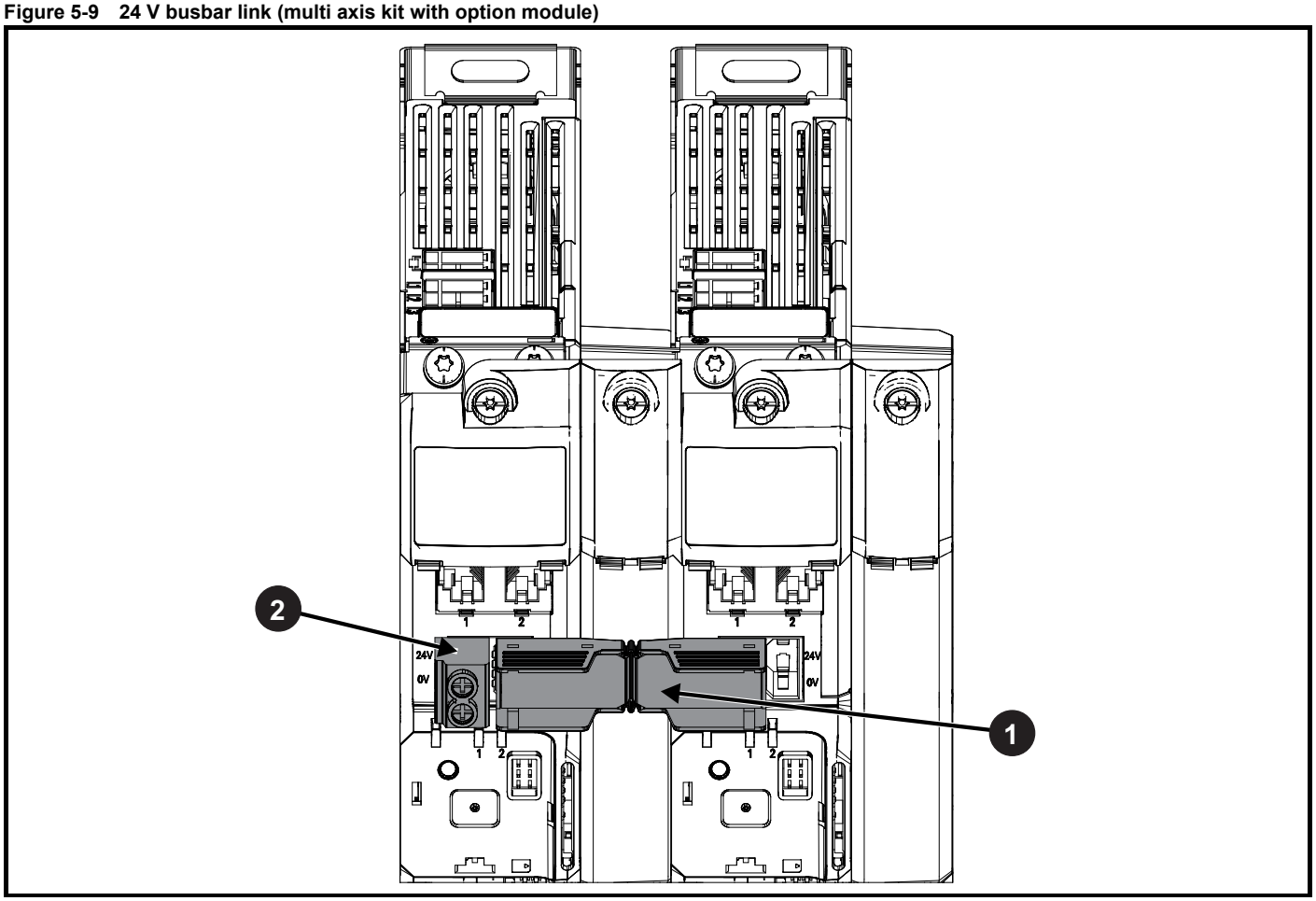

- The 24 Vdc busbar link (**1**) is a push fit connection which should be inserted adjacent to the 24 Vdc supply connector (**2**). The 24 Vdc supply connector can be fitted to either outermost drive.

NOTE

If the drive is required to attempt a controlled motor stop during a mains supply loss condition, then the external 24 Vdc must be maintained for at least as long as the drive remains active.

Calculating the external 24 Vdc supply requirements

The external 24 Vdc supply should be sized using the maximum input current and power demand referenced in Table 5-13, sum currents/power based on configuration.

The working voltage range of the 24 V power supply is as follows:

All frame sizes	
Nominal operating voltage	24.0 Vdc
Minimum continuous operating voltage	20.4 V
Maximum continuous operating voltage	28.8 V
Minimum start up voltage	20.4 V
Maximum fuse rating	30 A

Table 5-13 24 Vdc typical input current and power requirements

Model / Option / Feature	Frame size	Typical input current (mA) @ 24 V	Typical input power
Digitax HD M75X drive module	1 and 2	894	21.5
	3	1039	25
SI-option module	Per module	450	11
High current brake output	All	1200	28.8
KI-Compact display	All	10	0.24
KI-Remote LCD keypad	All	73	1.75

NOTE

During start up of the external 24 Vdc supply, allow for an additional 1 A for 300 ms.

5.4 Communications link

Each multi axis kits also includes a communications link, this is a pre-wired cable assembly which provides easy connection between communications modules.

Figure 5-10 Communications link connection

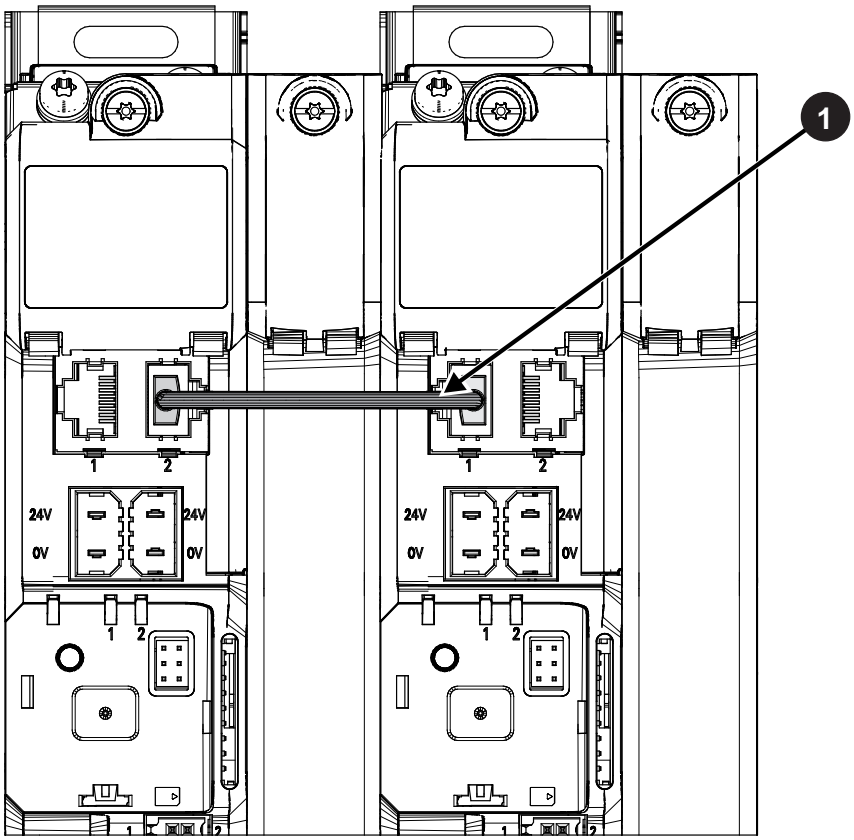

1. Communications link

5.5 Brake operation for multi axis systems

Where multiple brake resistors are required to dissipate energy on the DC bus it may be necessary to vary the brake IGBT turn on threshold via Braking IGBT Lower Threshold (Pr **06.073**) to avoid excess ripple on the DC bus. Care should be taken when reducing the threshold however to avoid going below the maximum value of the peak rectified supply voltage as the braking resistor could take power from the supply.

For further details refer to the relevant *Parameter Reference Guide*.

5.6 EMC filters for multi axis systems

External EMC filters with higher input current ratings suitable for multi axis systems are detailed in Table 4-17 *External EMC filter ratings* on page 71. Refer to the input current equation given in section 5.1.2 *DC paralleling using a Digitax HD M75X rectifier to provide the DC supply* on page 98 to size the EMC filter.

For more information, refer to the Digitax HD M75X series EMC datasheet available from the supplier of the drive.

5.7 Multi axis system installation

Direct side by side mounting is permissible between drives to minimize space requirement and allow for easy connectivity. For all types of installations (multi-axis with or without DIN Rail) use two suitable M5 screws in the upper mounting position and one screw at the lower mounting position.

5.7.1 Multiple drive mounting

Figure 5-11 Multiple drive mounting

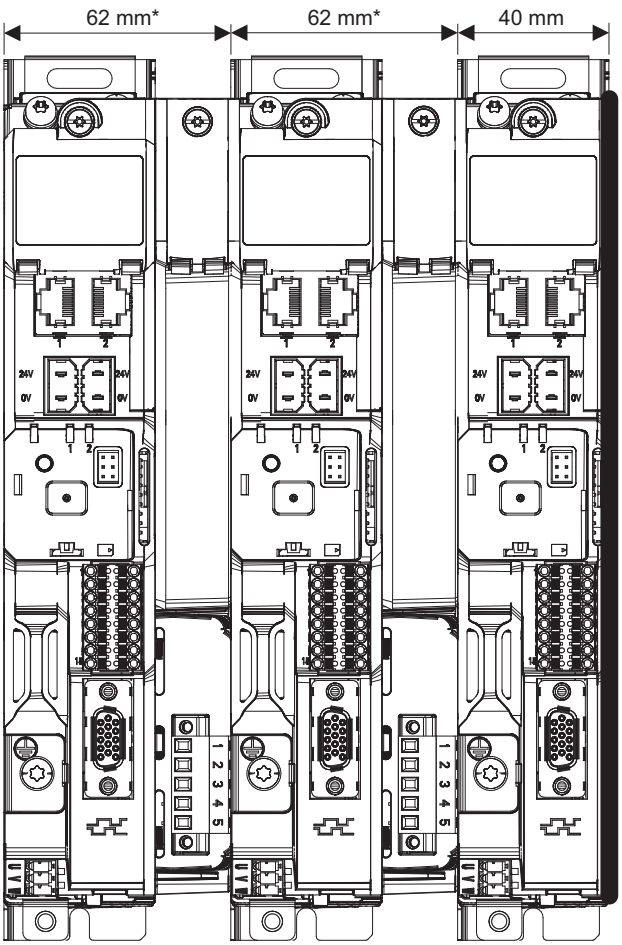

* Allow for up to +0.5 mm mechanical tolerance for each drive with option module support installed.

5.7.2 DIN rail alignment

DIN rail assembly is recommended with multi axis systems to align the DC power and ground busbar links, 24 Vdc link and communication link. Drives may be hooked onto the DIN rail, a recess is provided at the rear of the drive for this function. DIN rail should meet the following designation: Top hat rail EN 50022-35x7.5.

CAUTION

The DIN rail attachment is for alignment only and must not be used alone for drive mounting. Refer to section 5.7.3 *Drive mounting dimensions with DIN rail alignment*.

Figure 5-12 DIN rail alignment

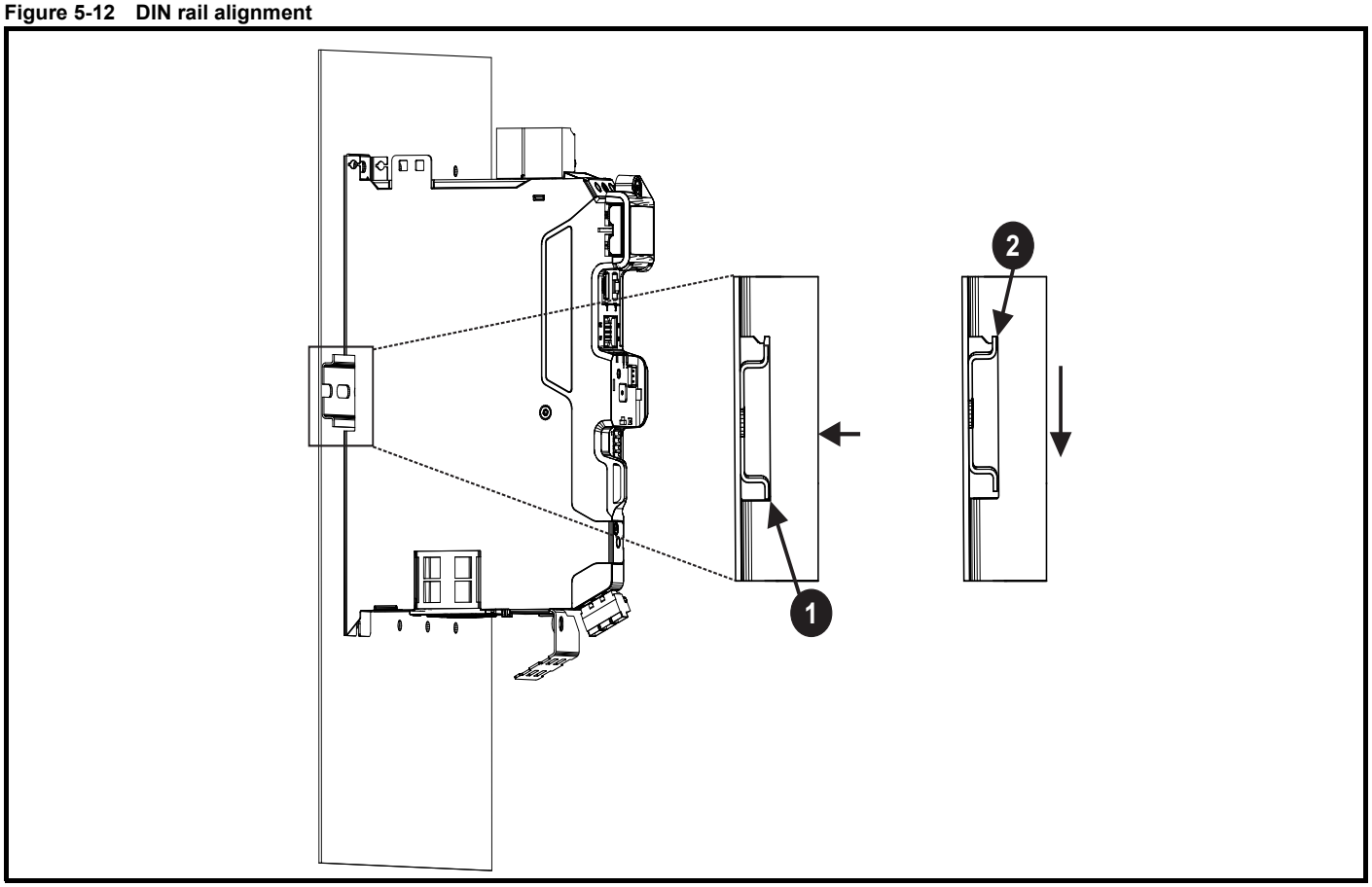

- Fit the drive over the DIN rail with the bottom rail flush against the lower edge of the recess at the rear of the drive (**1**).
- Slide the drive down so that the top rail sits into the channel at the upper edge of the recess at the rear of the drive (**2**).

5.7.3 Drive mounting dimensions with DIN rail alignment

Directly side by side mounting is permissible with no space required between drives.

Figure 5-13 Drive mounting dimensions with DIN rail alignment (no option module support)

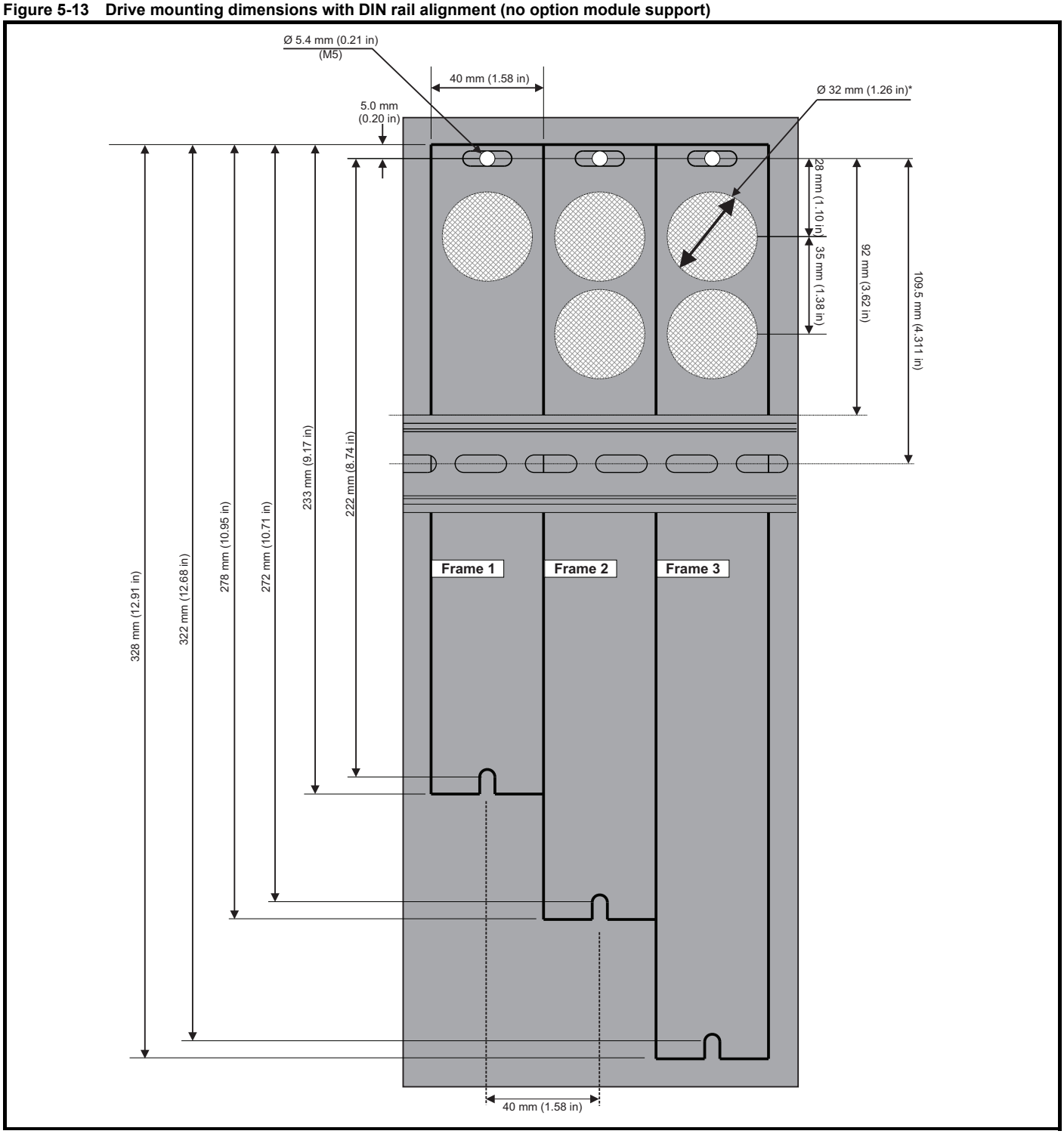

* Cut outs only required for rear venting; refer to section 3.12 *Rear venting*.

Figure 5-14 Drive mounting dimensions with DIN rail alignment (with option module support)

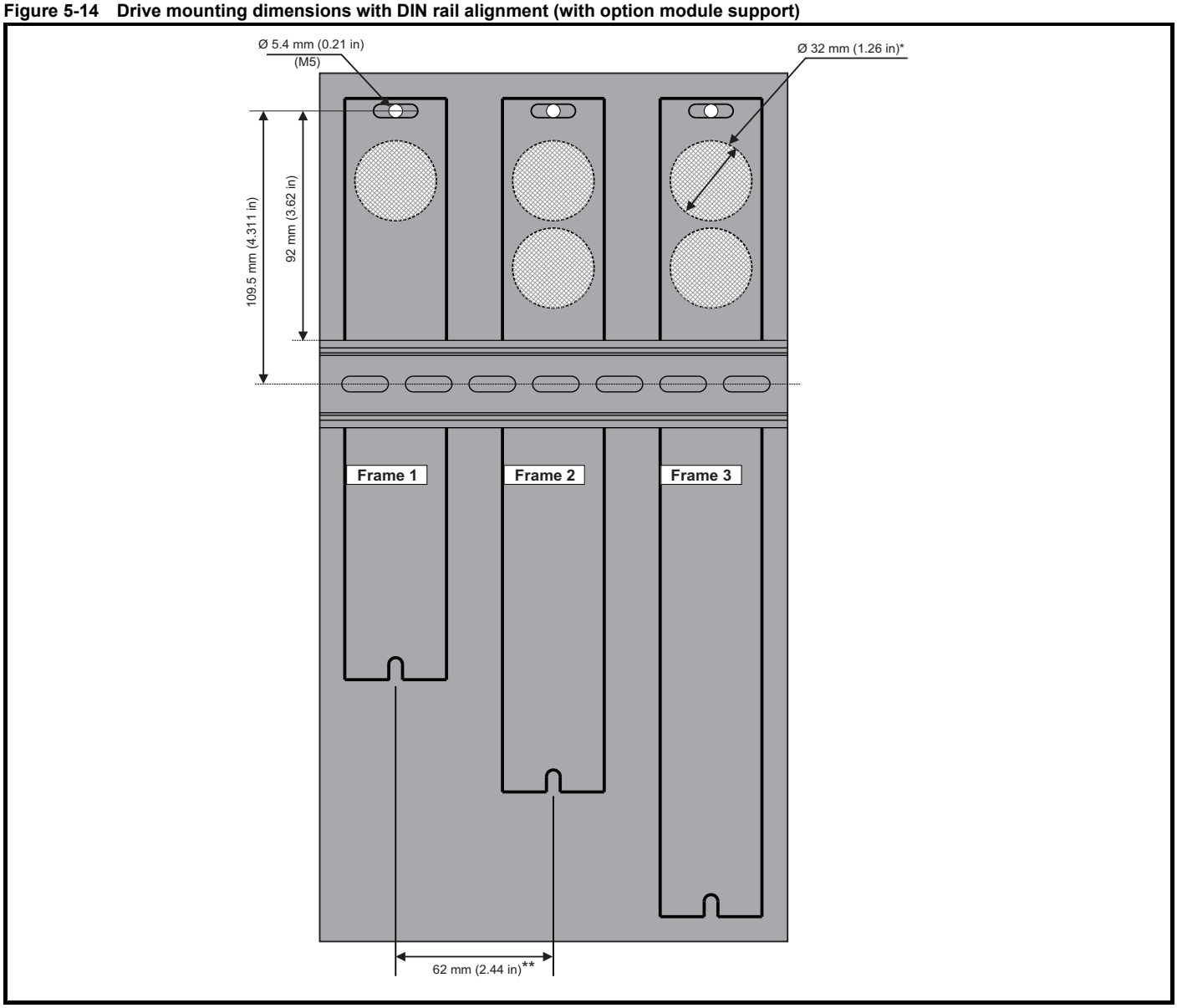

NOTE

* Cut outs only required for rear venting; refer to section 3.12 *Rear venting* on page 36.

** Allow for up to +0.5 mm tolerance between with each drive fitted with an option module mounting frame.

Mounting screws

For multi axis installation without DIN rail each drive should be secured by one M5 screw in the top mounting position and one M5 screw in the lower mounting position.

For multi axis installation with DIN rail attachment each drive should be secured with one M5 screw in the top mounting position only.

5.8 Example design of a multi axis system

A four axis system operates with the power profiles and layout detailed in Figure 5-15 and Table 5-14. Each axis is controlling a different torque profile.

All drives are to be connected via an EtherCAT network and two drives will have SI option modules fitted.

STEP 1 - Determine the power profile of the system

The worst case output current and speed profiles for each axis are calculated and plotted. Individual power and sum total power for all axis are also plotted in Figure 5-15.

STEP 2 - Select the most appropriate configuration to meet the demands of the power profile

The power profile plot of the total system demonstrates that the peak power demand is 9.6 kW.

Figure 5-15 Layout output current, speed and power profile

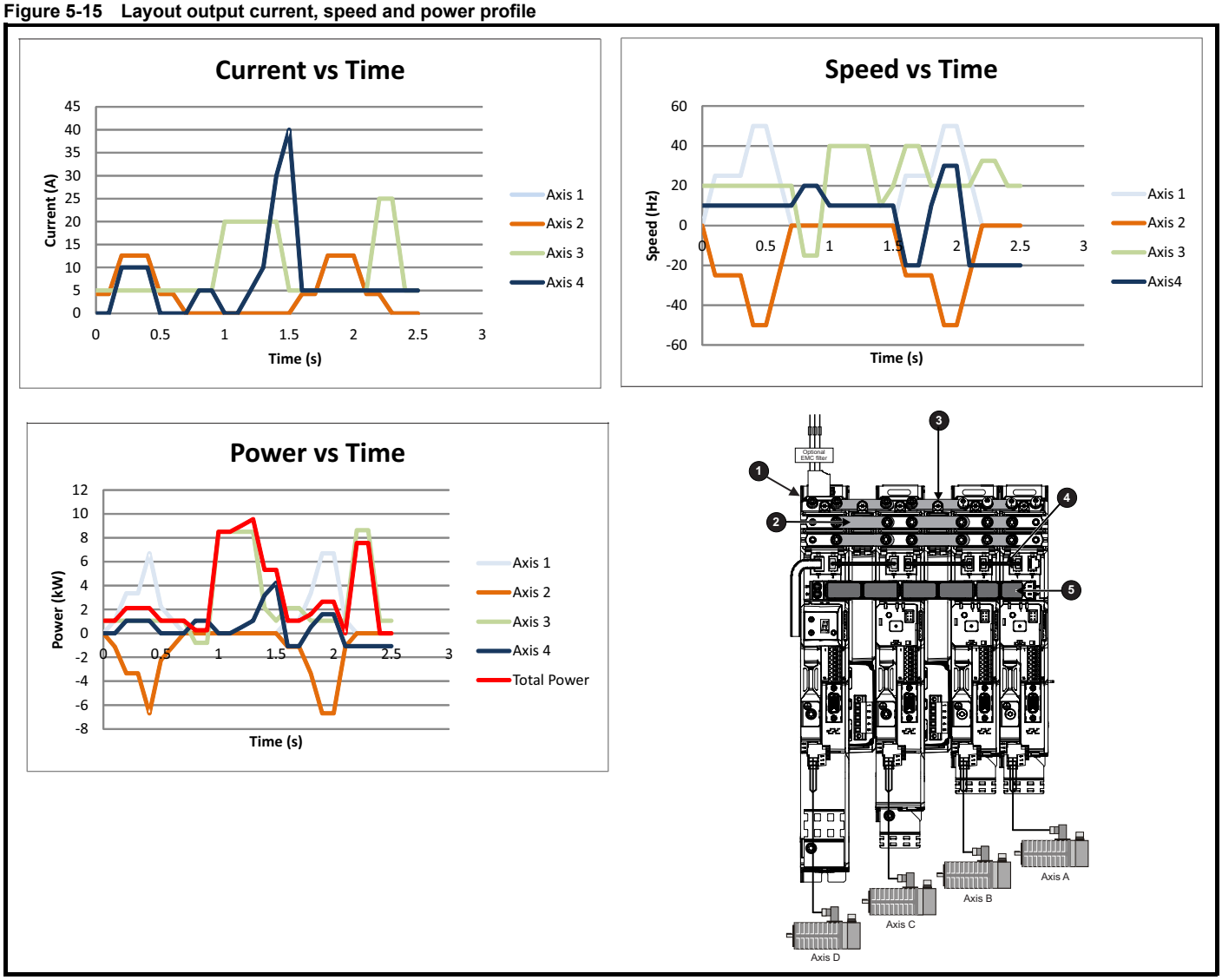

With reference to section 2.4 *Ratings* on page 10, the drives listed in Table 5-14 meet the individual power and current profiles for each axis.

The total peak power demanded from the multi axis system is 9.6 kW, with reference to Table 5-1 *Multi axis input ratings* on page 100, this is within the maximum continuous AC input power of the M753-03400160 selected for axis 4.

The total DC bus capacitance for all drives selected is 980 µF, see Table 5-14 application example. The maximum frame block capacitance for an M753-03400160 with no input inductor is 2210 µF, see Table 5-1 *Multi axis input ratings* on page 100.

The M753-03400160 can therefore be used as the AC source with all drives connected as one frame block via a parallel DC bus.

As the AC input current remains within 40 A and no supplemental DC fuses are required, three 40 A LPJ fuses in the AC branch would be sufficient.

Table 5-14 Application example

Axis name	Motor current	Output power	Internal capacitance
	A	kW	µF
Axis A - M753-01400042	0 to 12.6	0 to 6.69	110
Axis B - M753-01400042	0 to 12.6	-6.69 to 0	110
Axis C - M753-02400105	5 to 25	-0.8 to 8.7	290
Axis D - M753-03400160	0 to 40	0.0 to 4.28	470
			Total capacitance = 980 µF

STEP 3 - Calculate the external 24 Vdc supply requirements, EMC filter required and quantity of Multi axis kits needed

With reference to Table 5-7 24 Vdc typical input current and power requirements, the external 24 V current demand will be:

Table 5-15 24 V supply requirements for application example

Axis / Model / Option	Typical input current	Typical input power
	mA @ 24 V	W
Axis A - M753-01400042	894	21.5
Axis B - M753-01400042	894	21.5
Axis C - M753-02400105	894	21.5
Axis D - M753-03400160	1039	25
Option module x 2	900	22
Total	**4621**	**111.5**

EMC filter

The external EMC filter can be selected by input current rating using the following formula:

Input current (A) = a x P(kW)^2 + b x P(kW) + c

Where constants a, b and c are given in Table 5-16:

Table 5-16 Input current equation constants

Constant	200 V drives, 3 phase	400 V drives, 3 phase	200 V drives, single phase
a	-0.55	-0.2	-0.5
b	9.7	6	11
c	0.2	0.5	0

Input current (A) = -0.2 x 9.6^2 + 6 x 9.6 + 0.5

Input current (A) = 39.67

Suitable external EMC filter (refer to Table 6-43 *Optional external EMC filter details* on page 136):

4200-3233 (46 A)

Multi axis kits

As both the M753-02400105 and M753-03400160 (axis C and axis D respectively) require SI-option modules and axis A and B do not, the following multi axis kits are required:

Axis	Kit
Axis D - M753-03400160	9500-1048 (Multi axis kit with SI-Option Mounting kit fitted)
Axis C - M753-02400105	9500-1048 (Multi axis kit with SI-Option Mounting kit fitted)
Axis B - M753-01400042	9500-1047 (Multi axis kit without SI-Option Mounting kit fitted)

6 Technical data

6.1 Drive technical data

6.1.1 Peak current duration for pulse duty applications

The maximum duration for the peak output current depends on the total rms output current for the complete profile. The curves illustrated in Figure 6-1 to Figure 6-3 can be used to determine the maximum duration for the drive peak current when operating at different rms currents. The curves are shown normalised to the drive nominal current rating in a 40 °C ambient.

For example when using the Digitax HD M75X - 01400042

Nominal current = 4.2 A, Peak current = 12.6 A

- When operating at an output current of 4.2 A (1 on the curve), the peak current 12.6 A is available for 0.25 s.
- If the peak current of 12.6 A is required for 4 seconds, the maximum normalised r.m.s. current is 0.5 x 4.2 = 2.1 A.
- If the peak current of 12.6 A is required for 8 seconds, the current preceding the overload should be 0 A for at least 60 seconds (i.e. overload is only available from the cold condition).

Figure 6-1 Maximum duration for 300 % overload @ 8 kHz switching frequency, 40/50 °C ambient and 50/60 Hz output frequency

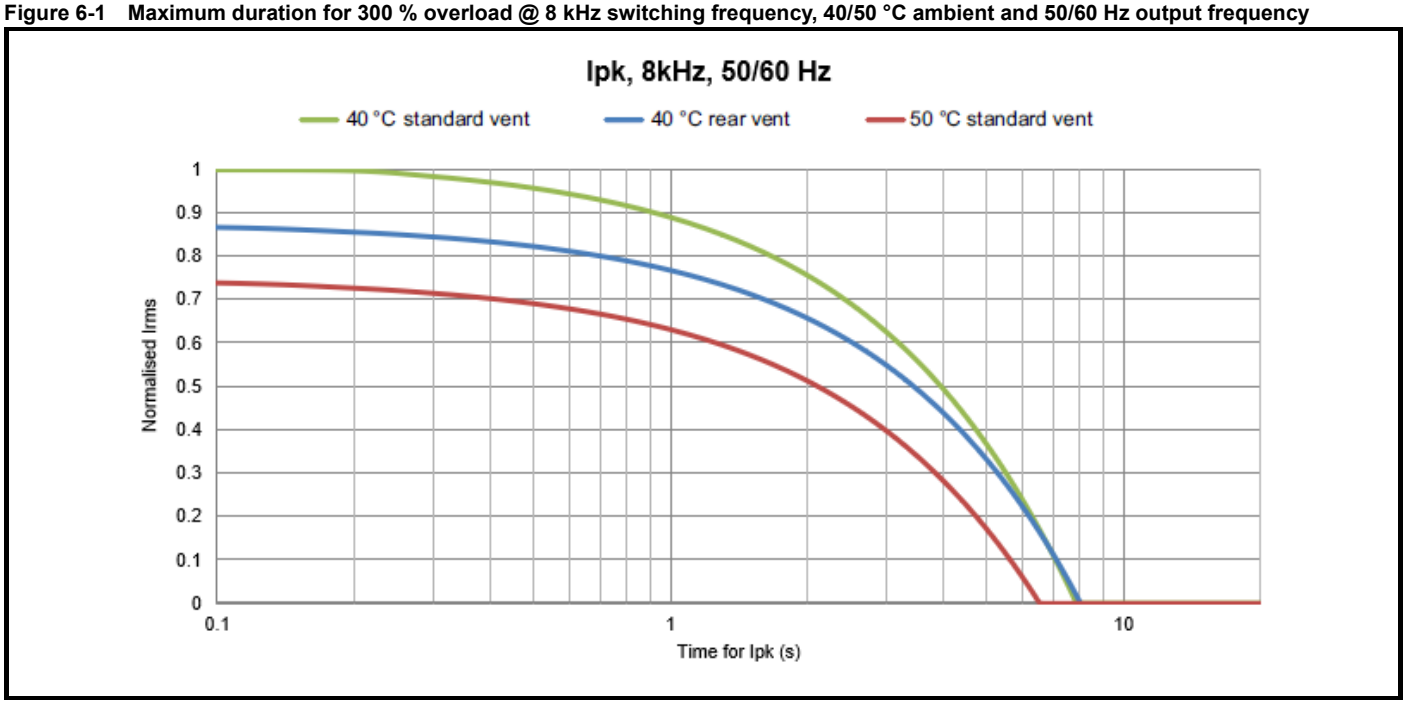

Figure 6-2 Maximum duration for 300 % overload @ 8 kHz switching frequency, 40 °C ambient and 0.1 Hz output frequency

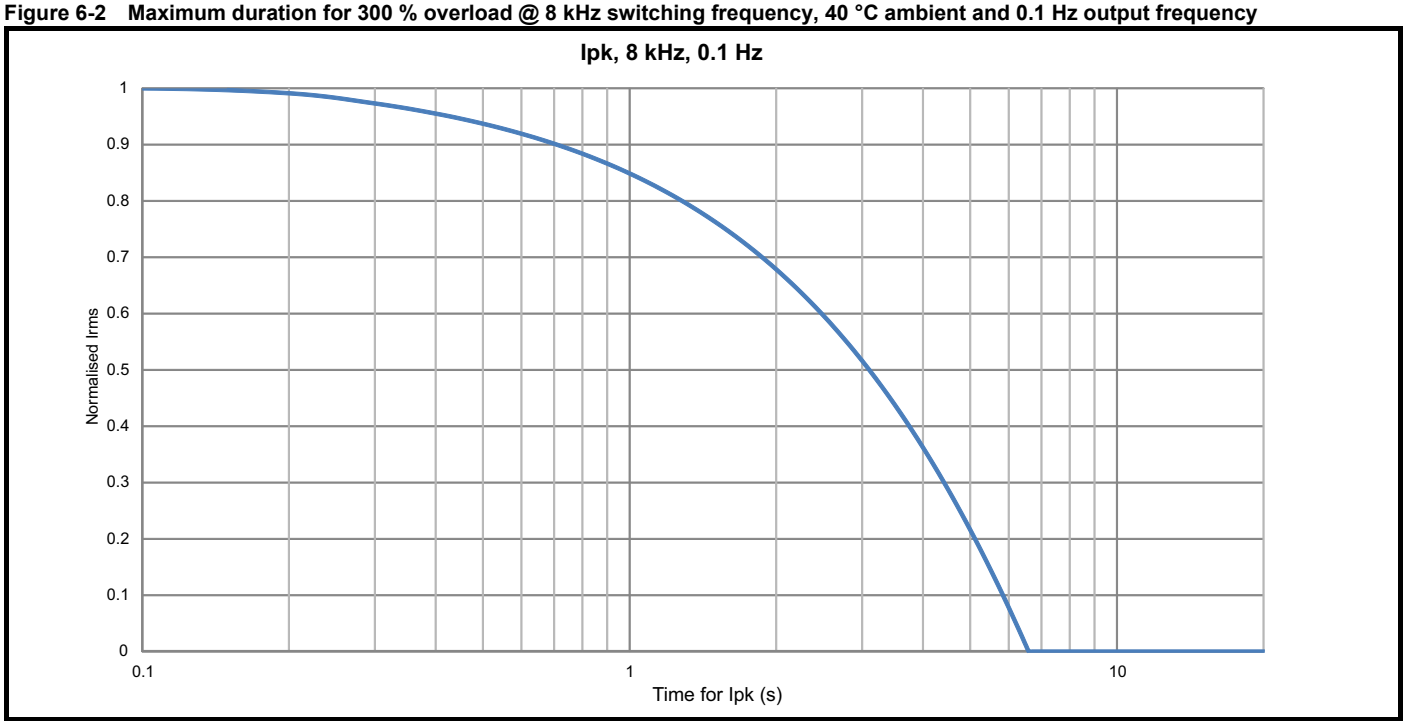

A reduction in the peak current will extend the overload duration, the maximum duration for a 200 % and 150 % overload can be determined from Figure 6-3.

Figure 6-3 Maximum duration for 200 % and 150 % overload @ 8 kHz switching frequency, 40 °C ambient and 50 Hz output frequency

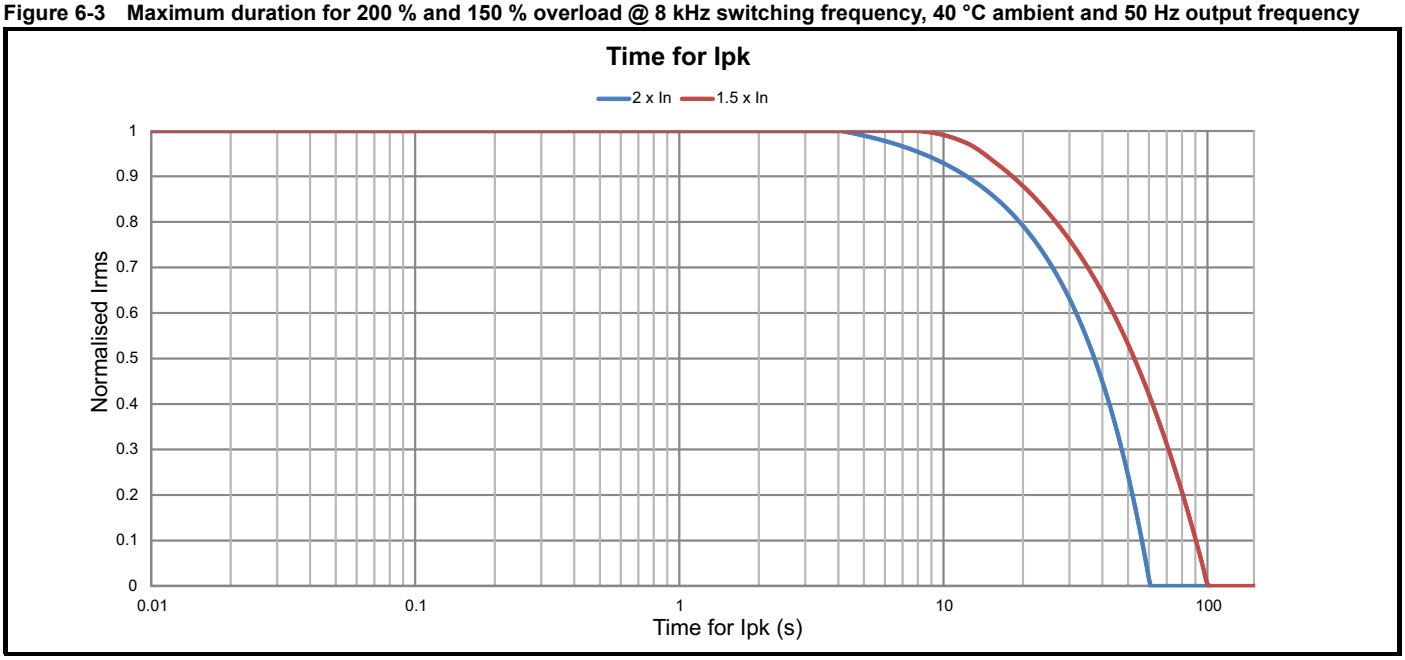

6.1.2 Open loop and RFC-A ratings

Table 6-1 200 V single phase drive ratings (200 V to 240 V ±10 %)

Model	Heavy Duty				
	Maximum continuous output current	Open loop peak current	RFC-A peak current	Nominal power at 230 V	Motor power at 230 V
	A	A	A	kW	hp
01200022	1.1	3.3	6.6	0.18	0.25
01200040	2.2	6.0	12.0	0.37	0.5
01200065	3.5	9.8	19.5	0.75	1.0
02200090	5.6	13.5	27.0	1.1	1.5
02200120	7.5	18.0	36.0	1.5	2.0
03200160	10.8	24.0	48.0	2.2	3.0

Table 6-2 200 V drive three phase ratings (200 V to 240 V ±10 %)

Model	Heavy Duty				
	Maximum continuous output current	Open loop peak current	RFC-A peak current	Nominal power at 230 V	Motor power at 230 V
	A	A	A	kW	hp
01200022	2.2	3.3	6.6	0.37	0.5
01200040	4.0	6.0	12.0	0.75	1.0
01200065	6.5	9.8	19.5	1.1	1.5
02200090	9.0	13.5	27.0	2.2	2.0
02200120	12.0	18.0	36.0	2.2	3.0
03200160	16.0	24.0	48.0	4.0	5.0

Table 6-3 400 V drive ratings (380 V to 480 V ±10 %)

Model	Heavy Duty				
	Maximum continuous output current	Open loop peak current	RFC-A peak current	Nominal power at 400 V	Motor power at 460 V
	A	A	A	kW	hp
01400015	1.5	2.3	4.5	0.37	0.75
01400030	3.0	4.5	9.0	0.75	1.5
01400042	4.2	6.3	12.6	1.5	2.0
02400060	6.0	9.0	18.0	2.2	3.0
02400080	8.0	12.0	24.0	3.0	5.0
02400105	10.5	15.8	31.5	4.0	5.0
03400135	13.5	20.3	40.5	5.5	7.5
03400160	16.0	24.0	48.0	5.5	10.0

NOTE

In continuous applications, the maximum allowed power may override the maximum allowable current when the motor power factor is greater than 0.87.

Typical short term overload limits

The maximum percentage overload limit changes depending on the selected motor. Variations in motor rated current, motor power factor and motor leakage inductance all result in changes in the maximum possible overload. The exact value for a specific motor can be calculated using the equations detailed in Menu 4 in the relevant *Digitax HD M75X Parameter Reference Guide.*

Typical values are shown in the table below for RFC-A, RFC-S and open loop (OL) modes:

	RFC from cold	RFC from 100 %	Open Loop from cold	Open Loop from 100 %
Heavy duty overload with motor rated current = drive rated current	300 % for 8 s or 200 % for 60 s	300 % for 0.25 s or 200 % for 4 s	150 % for 100 s	150 % for 8 s

Generally the drive rated current is higher than the matching motor rated current allowing a higher level of overload than the default setting. The time allowed in the overload region is proportionally reduced at very low output frequency on some drive ratings.

NOTE

The maximum overload level which can be attained is independent of the speed.

Drives are rated up to 55 °C. 55 °C ratings are available from the supplier of the drive.

Table 6-4 Open loop and RFC-A maximum permissible continuous output current @ 40 °C (104 °F) ambient

Model	Heavy Duty								
	Nominal rating		Maximum permissible continuous output current (A) allowing for 175 % overload for 4.5 s						
	kW	hp	2 kHz	3 kHz	4 kHz	6 kHz	8 kHz	12 kHz	16 kHz
200 V									
01200022	0.37	0.5	2.2					2.2	2.2
01200040	0.75	1.0	4.0					4.0	4.0
01200065	1.1	1.5	6.5					6.5	6.5
02200090	2.2	2.0	9.0					9.0	9.0
02200120	2.2	3.0	12.0					12.0	12.0
03200160	4.0	5.0	16.0					16.0	16.0
400 V									
01400015	0.37	0.75	1.5					1.5	1.5
01400030	0.75	1.5	3.0					3.0	3.0
01400042	1.5	2.0	4.2					4.2	3.5
02400060	2.2	3.0	6.0					6.0	6.0
02400080	3.0	5.0	8.0					8.0	7.4
02400105	4.0	5.0	10.5					9.1	7.4
03400135	5.5	7.5	13.5					13.1	10.9
03400160	5.5	10.0	16.0					13.1	10.9

Table 6-5 Open loop and RFC-A maximum permissible continuous output current @ 40 °C (104 °F) ambient with rear duct fitted

Model	Heavy Duty								
	Nominal rating		Maximum permissible continuous output current (A) allowing for 175 % overload for 4.5 s with rear duct fitted						
	kW	hp	2 kHz	3 kHz	4 kHz	6 kHz	8 kHz	12 kHz	16 kHz
200 V									
01200022	0.37	0.5	2.2					2.2	2.2
01200040	0.75	1.0	4.0					4.0	4.0
01200065	1.1	1.5	6.5					6.1	5.5
02200090	2.2	2.0	9.0					9.0	9.0
02200120	2.2	3.0	12.0					11.9	11.4
03200160	4.0	5.0	16.0					16.0	15.4
400 V									
01400015	0.37	0.75	1.5					1.5	1.5
01400030	0.75	1.5	3.0					3.0	2.9
01400042	1.5	2.0	4.1	4.0	3.8	3.6	3.4	3.4	2.9
02400060	2.2	3.0	6.0					6.0	6.0
02400080	3.0	5.0	8.0					8.0	6.3
02400105	4.0	5.0	10.5				9.6	8.0	6.3
03400135	5.5	7.5	13.5					11.5	9.6
03400160	5.5	10.0	16.0			15.4	14.1	11.5	9.6

Table 6-6 Open loop and RFC-A maximum permissible continuous output current @ 40 °C (104 °F) ambient (cooling fan at middle speed)

Model	Heavy Duty								
	Nominal rating		Maximum permissible continuous output current (A) (Pr 06.045 = 7 or -7)						
	kW	hp	2 kHz	3 kHz	4 kHz	6 kHz	8 kHz	12 kHz	16 kHz
200 V									
01200022	0.37	0.5	2.2					2.2	2.2
01200040	0.75	1.0	4.0					4.0	4.0
01200065	1.1	1.5	6.5					6.5	6.4
02200090	2.2	2.0	9.0					9.0	9.0
02200120	2.2	3.0	12.0				11.5	11.1	11.1
03200160	4.0	5.0	16.0					16.0	16.0
400 V									
01400015	0.37	0.75	1.5					1.5	1.5
01400030	0.75	1.5	3.0					3.0	2.5
01400042	1.5	2.0	4.2					3.2	2.5
02400060	2.2	3.0	6.0					6.0	6.0
02400080	3.0	5.0	8.0					7.5	6.6
02400105	4.0	5.0	10.5	10.4	9.9	9.0	8.4	7.5	6.6
03400135	5.5	7.5	13.5				12.6	10.1	8.0
03400160	5.5	10.0	16.0		15.7	14.4	12.6	10.1	8.0

Table 6-7 Open loop and RFC-A maximum permissible continuous output current @ 50 °C (122 °F) ambient

Model	Heavy Duty						
	Maximum permissible continuous output current (A) allowing for 175 % overload for 4.5 s						
	2 kHz	3 kHz	4 kHz	6 kHz	8 kHz	12 kHz	16 kHz
200 V							
01200022	2.2	2.2	2.2	2.2	2.2	2.2	2.2
01200040	4.0	4.0	4.0	4.0	4.0	4.0	4.0
01200065	6.2	6.1	5.9	5.7	5.4	4.9	4.4
02200090	9.0	9.0	9.0	9.0	9.0	9.0	9.0
02200120	11.5	11.3	11.0	10.7	10.3	9.8	9.5
03200160	16.0	16.0	16.0	16.0	15.7	14.0	13.3
400 V							
01400015	1.5	1.5	1.5	1.5	1.5	1.5	1.5
01400030	3.0	3.0	3.0	3.0	3.0	2.9	2.5
01400042	3.5	3.4	3.4	3.3	3.2	2.9	2.5
02400060	6.0	6.0	6.0	6.0	6.0	6.0	5.4
02400080	8.0	8.0	8.0	8.0	7.5	6.5	5.4
02400105	9.1	9.0	8.9	8.2	7.5	6.5	5.4
03400135	13.5	13.5	13.5	13.3	12.2	9.9	8.2
03400160	16.0	15.2	14.6	13.3	12.2	9.9	8.2

Table 6-8 Open loop and RFC-A maximum permissible continuous output current @ 50 °C (122 °F) ambient with rear duct fitted

Model	Heavy Duty						
	Maximum permissible continuous output current (A) allowing for 175 % overload for 4.5 s with rear duct fitted						
	2 kHz	3 kHz	4 kHz	6 kHz	8 kHz	12 kHz	16 kHz
200 V							
01200022	2.2	2.2	2.2	2.2	2.2	2.2	2.2
01200040	3.8	3.8	3.7	3.5	3.3	3.1	2.7
01200065	3.8	3.8	3.7	3.5	3.3	3.1	2.7
02200090	9.0	9.0	8.9	8.5	8.3	7.9	7.6
02200120	9.2	9.0	8.9	8.5	8.3	7.9	7.6
03200160	14.7	14.6	14.4	14.0	13.1	11.8	11.0
400 V							
01400015	1.5	1.5	1.5	1.5	1.5	1.5	1.5
01400030	2.1	2.0	1.9	1.8	1.7	1.7	1.7
01400042	2.1	2.0	1.9	1.8	1.7	1.7	1.7
02400060	6.0	6.0	6.0	6.0	6.0	5.6	4.3
02400080	6.8	6.7	6.6	6.4	6.3	5.6	4.3
02400105	6.8	6.7	6.6	6.4	6.3	5.6	4.3
03400135	12.3	12.3	12.2	11.2	10.2	8.3	6.7
03400160	12.3	12.3	12.2	11.2	10.2	8.3	6.7

Table 6-9 Open loop and RFC-A maximum permissible continuous output current @ 50 °C (122 °F) ambient (cooling fan at middle speed)

Model	Heavy Duty						
	Maximum permissible continuous output current (A) (Pr 06.045 = 7 or -7)						
	2 kHz	3 kHz	4 kHz	6 kHz	8 kHz	12 kHz	16 kHz
200 V							
01200022	2.2	2.2	2.2	2.2	2.2	2.2	2.2
01200040	4.0	4.0	4.0	4.0	4.0	4.0	4.0
01200065	6.5	6.5	6.5	6.5	6.2	5.5	4.7
02200090	8.9	8.6	8.4	8.0	7.8	7.6	7.6
02200120	8.9	8.6	8.4	8.0	7.8	7.6	7.6
03200160	16.0	16.0	16.0	15.8	15.2	13.8	12.6
400 V							
01400015	1.5	1.5	1.5	1.5	1.5	1.5	1.5
01400030	3.0	3.0	2.9	2.7	2.5	2.3	1.8
01400042	3.2	3.1	2.9	2.7	2.5	2.3	1.8
02400060	6.0	6.0	6.0	6.0	6.0	5.5	4.8
02400080	8.0	7.7	7.2	6.7	6.2	5.5	4.8
02400105	8.1	7.7	7.2	6.7	6.2	5.5	4.8
03400135	13.5	13.3	12.6	10.9	9.6	7.5	6.1
03400160	13.8	13.3	12.6	10.9	9.6	7.5	6.1

Table 6-10 Open loop and RFC-A maximum permissible continuous output current @ 55 °C

Model	Heavy Duty								
	Nominal Rating		Maximum permissible continuous output current (A) allowing for 175 % overload for 4.5 s						
	kW	hp	2 kHz	3 kHz	4 kHz	6 kHz	8 kHz	12 kHz	16 kHz
200 V									
1200022	0.37	0.5	2.2	2.2	2.2	2.2	2.2	2.2	2.2
1200040	0.75	1.0	4.0	4.0	4.0	4.0	4.0	3.5	3.2
1200065	1.1	1.5	6.2	6.1	5.7	4.7	4.2	3.5	3.2
2200090	2.2	2.0	9.0	9.0	8.9	8.5	8.3	7.9	7.6
2200120	2.2	3.0	9.2	9.0	8.9	8.5	8.3	7.9	7.6
2200160	4.0	5.0	14.7	14.6	14.4	14.1	13.1	11.8	11.0
400 V									
1400015	0.37	0.75	1.5	1.5	1.5	1.5	1.5	1.5	1.5
1400030	0.75	1.5	2.4	2.4	2.3	2.2	2.1	2.0	1.8
1400042	1.5	2.0	2.4	2.4	2.3	2.2	2.1	2.0	1.8
2400060	2.2	3.0	6.0	6.0	6.0	6.0	6.0	5.6	4.3
2400080	3.0	5.0	6.8	6.7	6.6	6.4	6.3	5.6	4.3
2400105	4.0	5.0	6.8	6.7	6.6	6.4	6.3	5.6	4.3
3400135	5.5	7.5	12.8	12.6	12.5	11.5	10.6	8.5	7.0
3400160	5.5	10.0	12.8	12.6	12.5	11.5	10.6	8.5	7.0

Table 6-11 Open loop and RFC-A maximum permissible continuous output current @ 55 °C (131 °F) ambient with rear duct fitted

Model	Heavy Duty								
	Nominal Rating		Maximum permissible continuous output current (A) allowing for 175 % overload for 4.5 s with rear duct fitted						
	kW	hp	2 kHz	3 kHz	4 kHz	6 kHz	8 kHz	12 kHz	16 kHz
200 V									
1200022	0.37	0.5	2.2	2.2	2.2	2.1	1.9	1.6	1.4
1200040	0.75	1.0	3.2	2.9	2.5	2.1	1.9	1.6	1.4
1200065	1.1	1.5	3.2	2.9	2.5	2.1	1.9	1.6	1.4
2200090	2.2	2.0	6.8	6.7	6.6	6.4	6.2	5.9	5.6
2200120	2.2	3.0	6.8	6.7	6.6	6.4	6.2	5.9	5.6
2200160	4.0	5.0	9.8	9.6	9.6	9.4	9.3	9.0	8.6
400 V									
1400015	0.37	0.75	1.1	1.1	1.1	1.0	1.0	0.9	0.8
1400030	0.75	1.5	1.1	1.1	1.1	1.0	1.0	0.9	0.8
1400042	1.5	2.0	1.1	1.1	1.1	1.0	1.0	0.9	0.8
2400060	2.2	3.0	4.5	4.5	4.4	4.3	4.2	3.9	3.3
2400080	3.0	5.0	4.5	4.5	4.4	4.3	4.2	3.9	3.3
2400105	4.0	5.0	4.5	4.5	4.4	4.3	4.2	3.9	3.3
3400135	5.5	7.5	8.2	8.2	8.2	7.5	6.7	5.4	4.5
3400160	5.5	10.0	8.2	8.2	8.2	7.5	6.7	5.4	4.5

Table 6-12 Open loop and RFC-A maximum permissible continuous output current @ 55 °C (131 °F) ambient (cooling fan at middle speed)

Model	Heavy Duty								
	Nominal Rating		Maximum permissible continuous output current (A) (Pr 06.045 = 7 or -7)						
	kW	hp	2 kHz	3 kHz	4 kHz	6 kHz	8 kHz	12 kHz	16 kHz
200 V									
1200022	0.37	0.5	2.2	2.2	2.2	2.2	2.2	2.2	2.2
1200040	0.75	1.0	4.0	4.0	4.0	4.0	4.0	4.0	3.9
1200065	1.1	1.5	6.3	6.1	5.8	5.3	4.9	4.4	3.9
2200090	2.2	2.0	6.2	6.2	6.1	6.1	6.0	5.8	5.8
2200120	2.2	3.0	6.2	6.2	6.1	6.1	6.0	5.8	5.8
2200160	4.0	5.0	13.4	13.3	13.0	12.2	11.5	10.4	9.4
400 V									
1400015	0.37	0.75	1.5	1.5	1.5	1.5	1.5	1.5	1.4
1400030	0.75	1.5	2.1	2.1	1.9	1.8	1.7	1.5	1.4
1400042	1.5	2.0	2.1	2.1	1.9	1.8	1.7	1.5	1.4
2400060	2.2	3.0	6.0	6.0	6.0	5.5	5.0	4.5	3.9
2400080	3.0	5.0	6.6	6.3	6.0	5.5	5.0	4.5	3.9
2400105	4.0	5.0	6.6	6.3	6.0	5.5	5.0	4.5	3.9
3400135	5.5	7.5	10.6	10.1	9.6	8.6	7.8	6.2	5.0
3400160	5.5	10.0	10.6	10.1	9.6	8.6	7.8	6.2	5.0

6.1.3 Continuous rating

Table 6-13 Continuous rating with no overload @ 0 Hz output frequency, 40 °C (104 °F) ambient

Model	Heavy Duty								
	Nominal rating		Maximum permissible continuous output current (A) at 0 Hz with no overload						
	kW	hp	2 kHz	3 kHz	4 kHz	6 kHz	8 kHz	12 kHz	16 kHz
200 V									
01200022	0.37	0.5	2.2					2.2	2.2
01200040	0.75	1.0	4.0					4.0	4.0
01200065	1.1	1.5	6.5					6.4	5.5
02200090	2.2	2.0	9.0					9.0	8.4
02200120	2.2	3.0	12.0					11.6	10.8
03200160	4.0	5.0	16.0					15.2	13
400 V									
01400015	0.37	0.75	1.5					1.5	1.5
01400030	0.75	1.5	3.0					2.9	1.9
01400042	1.5	2.0	4.2				3.8	2.9	1.9
02400060	2.2	3.0	6.0					6.0	5.0
02400080	3.0	5.0	8.0					8.0	6.9
02400105	4.0	5.0	10.5			10.3	8.8	9.4	6.9
03400135	5.5	7.5	13.5					11.8	9.8
03400160	5.5	10.0	16.0			15.8	13.8	11.8	9.8

Table 6-14 Continuous rating with no overload @ 0 Hz output frequency, 50 °C (122 °F) ambient

Model	Heavy Duty						
	Maximum permissible continuous output current (A) at 0 Hz with no overload						
	2 kHz	3 kHz	4 kHz	6 kHz	8 kHz	12 kHz	16 kHz
200 V							
01200022	2.2	2.2	2.2	2.2	2.2	2.2	2.2
01200040	4.0	4.0	4.0	4.0	4.0	4.0	4.0
01200065	6.2	6.0	5.9	5.7	5.4	4.9	4.4
02200090	9.0	9.0	9.0	9.0	9.0	9.0	4.6
02200120	11.5	11.3	11.0	10.7	10.3	9.8	4.6
03200160	16.0	16.0	16.0	16.0	16.0	14.6	13.6
400 V							
01400015	1.5	1.5	1.5	1.5	1.5	1.5	1.5
01400030	3.0	3.0	3.0	3.0	3.0	2.6	1.6
01400042	3.4	3.4	3.4	3.3	3.2	2.6	1.6
02400060	6.0	6.0	6.0	6.0	6.0	6.0	5.6
02400080	8.0	8.0	8.0	8.0	8.0	7.2	5.6
02400105	9.1	9.0	8.9	8.6	8.0	7.2	5.6
03400135	13.5	13.5	13.5	13.5	12.5	10.3	8.5
03400160	16.0	15.7	14.9	13.6	12.5	10.3	8.5

Table 6-15 Continuous rating with no overload @ 0 Hz output frequency, 55 °C (131 °F) ambient

Model	Heavy Duty								
	Nominal rating		Maximum permissible continuous output current (A) at 0 Hz with no overload						
	kW	hp	2 kHz	3 kHz	4 kHz	6 kHz	8 kHz	12 kHz	16 kHz
200 V									
01200022	0.37	0.5	2.2	2.2	2.2	2.2	2.2	2.2	2.2
01200040	0.75	1.0	4.0	4.0	4.0	3.8	3.7	3.3	3.1
01200065	1.1	1.5	4.2	4.2	4.0	3.8	3.7	3.3	3.1
02200090	2.2	2.0	9.0	9.0	8.9	8.5	8.3	7.9	2.5
02200120	2.2	3.0	9.2	9.0	8.9	8.5	8.3	7.9	2.5
03200160	4.0	5.0	14.7	14.6	14.4	14.1	13.1	11.8	11.0
400 V									
01400015	0.37	0.75	1.5	1.5	1.5	1.5	1.5	1.5	1.3
01400030	0.75	1.5	2.4	2.4	2.3	2.2	2.1	2.0	1.3
01400042	1.5	2.0	2.4	2.4	2.3	2.2	2.1	2.0	1.3
02400060	2.2	3.0	6.0	6.0	6.0	6.0	6.0	5.6	4.3
02400080	3.0	5.0	6.8	6.7	6.6	6.4	6.3	5.6	4.3
02400105	4.0	5.0	6.8	6.7	6.6	6.4	6.3	5.6	4.3
03400135	5.5	7.5	12.8	12.6	12.5	11.5	10.6	8.5	7.0
03400160	5.5	10.0	12.8	12.6	12.5	11.5	10.6	8.5	7.0

6.1.4 Power dissipation

Table 6-16 Losses from 40 °C (104 °F) up to 55 °C (131 °F) ambient.

Model	Heavy Duty						
	Drive losses (W) taking into account any current derating for the given conditions						
	2 kHz	3 kHz	4 kHz	6 kHz	8 kHz	12 kHz	16 kHz
200 V							
01200022	30.2	30.3	30.4	30.6	30.8	31.2	31.6
01200040	37.6	37.8	38.0	38.3	38.7	39.4	40.1
01200065	46.6	46.8	47.1	47.7	48.2	49.4	50.5
02200090	54.3	54.5	54.7	55.1	55.6	56.4	57.3
02200120	66.2	66.5	66.8	67.3	67.9	69.0	70.2
03200160	85.2	85.6	86.0	86.7	87.5	89.0	90.6
400 V							
01400015	27.8	28.1	28.3	28.9	29.4	30.5	31.6
01400030	34.1	34.6	35.2	36.2	37.3	39.5	41.7
01400042	37.2	38.0	38.7	40.2	41.8	44.8	47.9
02400060	45.8	46.9	47.9	50.1	52.2	56.6	61.2
02400080	54.3	55.7	57.1	60.0	62.8	68.7	74.8
02400105	65.0	66.9	68.7	72.4	76.2	84.0	91.9
03400135	80.2	82.2	84.2	88.3	92.4	100.7	109.1
03400160	87.1	89.5	91.9	96.7	101.6	111.4	121.4

Rear vent power dissipation

When the rear vent kit is installed the majority of drive losses are removed via the rear vent, however some heat losses will remain within the enclosure. Table 6-17 details how this loss is divided for each frame size. The data in Table 6-17 should be used in conjunction with Table 6-16.

Table 6-17 Rear vent power loss distribution

Drive	Percentage of Heat via rear vent	Percentage of heat remaining within enclosure
All Frames	75 %	25 %

Example

Digitax HD M75X-01400015 operating with a 8 kHz switching frequency within a 40 °C ambient temperature.

Total drive loss for given condition = 29.4 W

Drive losses expelled via rear vent = 22 W (75 %)

Drive losses remaining within the cubicle = 7.4 W (25 %)

6.1.5 AC supply requirements

Table 6-18 Supply requirements

Model	Voltage	Frequency range
Digitax HD M75X 200 V	200 V to 240 V ±10 % single phase	45 to 66 Hz
Digitax HD M75X 200 V	200 V to 240 V ±10 % three phase*	45 to 66 Hz
Digitax HD M75X 400 V	380 V to 480 V ±10 % three phase*	45 to 66 Hz

* Maximum supply imbalance: 2 % negative phase sequence (equivalent to 3 % voltage imbalance between phases).

6.1.6 Capacitor module DC supply requirements

M75C (200 V) – 200 Vdc to 370 Vdc

M75C (400 V) – 360 Vdc to 760 Vdc

The module will instigate an under voltage/over voltage as appropriate if the DC bus voltage drifts outside these limits.

6.1.7 Input inductors

Input inductors reduce the risk of damage to the drive resulting from poor phase balance or severe disturbances on the supply network.

Where input inductors are to be used, reactance values of approximately 2 % are recommended. Higher values may be used if necessary, but may result in a loss of drive output (reduced torque at high speed) because of the voltage drop.

For all drive ratings, 2 % input inductors permit drives to be used with a supply imbalance of up to 3.5 % negative phase sequence (equivalent to 5 % voltage imbalance between phases). Severe disturbances may be caused by the following factors, for example:

- Power factor correction equipment connected close to the drive
- Large DC drives having no or inadequate input inductors connected to the supply
- Direct-on-line started motor(s) connected to the supply such that when any of these motors are started, the voltage dip exceeds 20 %.

Such disturbances may cause excessive peak currents to flow in the input power circuit of the drive. This may cause nuisance tripping, or in extreme cases, failure of the drive.

Drives of low power rating may also be susceptible to disturbance when connected to supplies with a high rated capacity.

When required, each drive must have its own input inductor. Three individual inductors or a single three-phase inductor should be used.

Inductor current ratings

Continuous current:

Not less than the continuous input current rating of the drive.

Repetitive peak current:

Not less than three times the continuous input current rating of the drive.

6.1.8 Motor requirements

No. of phases: 3

Maximum voltage:

Digitax HD M75X (200 V): 240 V
Digitax HD M75X (400 V): 480 V

6.1.9 Temperature, humidity and cooling method

Ambient temperature operating range:

- 20 °C to 55 °C 8 (-4 °F to 131 °F).

Output current derating must be applied at ambient temperatures > 40 °C (104 °F).

Cooling method: Forced cooled

Maximum humidity: 95 % non-condensing at 40 °C (104 °F)

Capacitor module trip temperature: 100 °C (212 °F)

6.1.10 Storage

-40 °C (-40 °F) to +55 °C (131 °F) for long term storage, or to +70 °C (185 °F) for short term storage.

Storage time is 2 years.

Electrolytic capacitors in any electronic product have a storage period after which they require reforming or replacing.
The DC bus capacitors have a storage period of 10 years.

6.1.11 Altitude

Altitude range: 0 to 3,000 m (9,900 ft), subject to the following conditions:

1,000 m to 3,000 m (3,300 ft to 9,900 ft) above sea level: de-rate the maximum output current from the specified figure by 1 % per 100 m (330 ft) above 1,000 m (3,300 ft)
For example at 3,000 m the output current of the drive would have to be de-rated by 20 %.

6.1.12 IP Rating

The drive is rated to IP20 (dry, non-conductive contamination only).
The IP rating of a product is a measure of protection against ingress and contact to foreign bodies and water. It is stated as IP XX, where the two digits (XX) indicate the degree of protection provided as shown in Table 6-19.

Table 6-19 IP Rating degrees of protection

First digit		Second digit	
Protection against foreign bodies and access to hazardous parts		Protection against ingress of water	
0	Non-protected	0	Non-protected
1	Protected against solid foreign objects of 50 mm Ø and greater (back of a hand)	1	Protected against vertically falling water drops
2	Protected against solid foreign objects of 12.5 mm Ø and greater (finger)	2	Protected against vertically falling water drops when enclosure tilted up to 15°
3	Protected against solid foreign objects of 2.5 mm Ø and greater (tool)	3	Protected against spraying water
4	Protected against solid foreign objects of 1.0 mm Ø and greater (wire)	4	Protected against splashing water
5	Dust-protected	5	Protected against water jets
6	Dust-tight	6	Protected against powerful water jets
7	-	7	Protected against the effects of temporary immersion in water
8	-	8	Protected against the effects of continuous immersion in water

6.1.13 Corrosive gasses

Concentrations of corrosive gases must not exceed the levels given in:

- Table A2 of EN 50178:1998
- Class 3C2 of IEC 60721-3-3

This corresponds to the levels typical of urban areas with industrial activities and/or heavy traffic, but not in the immediate neighbourhood of industrial sources with chemical emissions.

6.1.14 RoHS compliance

The drive meets EU directive 2002-95-EC for RoHS compliance.

6.1.15 Vibration

Maximum recommended continuous vibration level 0.14 g r.m.s. broadband 5 to 200 Hz.

NOTE

This is the limit for broad-band (random) vibration. Narrow-band vibration at this level which coincides with a structural resonance could result in premature failure.

The following tests were carried out to verify the robustness of the Digitax HD M75X range. The tests are not recommended installation conditions.

Bump Test

Testing in each of three mutually perpendicular axes in turn.
Referenced standard: IEC 60068-2-27
Severity: 18 g, 6 ms, half sine
No. of Bumps: 600 (100 in each direction of each axis)

Random Vibration Test

Testing in each of three mutually perpendicular axes in turn.
Referenced standard: IEC 60068-2-64: Test Fh:
Severity: 1.0 m^2/s^3 (0.01 g^2/Hz) ASD from 5 to 20 Hz
-3 dB/octave from 20 to 200 Hz
Duration: 30 minutes in each of 3 mutually perpendicular axes.

Sinusoidal Vibration Test

Testing in each of three mutually perpendicular axes in turn.Referenced standard: IEC 60068-2-6: Test Fc:
Frequency range: 5 to 500 Hz
Severity: 3.5 mm peak displacement from 5 to 9 Hz
10 m/s^2 peak acceleration from 9 to 200 Hz
15 m/s^2 peak acceleration from 200 to 500 Hz
Sweep rate: 1 octave/minute
Duration: 15 minutes in each of 3 mutually perpendicular axes.

EN 61800-5-1:2007, Section 5.2.6.4. referring to IEC 60068-2-6
Frequency range: 10 to 150 Hz
Amplitude: 10 to 57 Hz at 0.075 mm pk
57 to 150 Hz at 1g p
Sweep rate: 1 octave/minute
Duration: 10 sweep cycles per axis in each of 3 mutually perpendicular axes

6.1.16 Starts per hour

By electronic control: unlimited
By interrupting the AC supply: ≤ 20 (equally spaced)

6.1.17 Start up time

This is the time taken from the moment of applying power and the 24 Vdc supply to the drive, to the drive being ready to run the motor: All frame sizes - ≤ 1.5 s (this may be extended by onboard/option module user program).

6.1.18 Output frequency / speed range

In Open loop, the maximum frequency is limited to 599 Hz. In RFC-A and RFC-S it is limited to 550 Hz.

6.1.19 Accuracy and resolution

Speed:

The absolute frequency and speed accuracy depends on the accuracy of the crystal used with the drive microprocessor. The accuracy of the crystal is 100 ppm, and so the absolute frequency/speed accuracy is 100 ppm (0.01 %) of the reference, when a preset speed is used. If an analog input is used the absolute accuracy is further limited by the absolute accuracy of the analog input.

The following data applies to the drive only; it does not include the performance of the source of the control signals.

Open loop resolution:
Preset frequency reference: 0.1 Hz
Precision frequency reference: 0.001 Hz
Closed loop resolution
Preset speed reference: 0.1 rpm
Precision speed reference: 0.001 rpm
Analog input: 11 bit plus sign

Current:

The resolution of the current feedback is 10 bit plus sign.
Accuracy: typical 2 %
worst case 5 %

6.1.20 Acoustic noise

The cooling fan generates the majority of the sound pressure level at 1 m produced by the drive. The cooling fan on all drive sizes is a variable speed fan. The drive controls the speed at which the fan runs based on the temperature of the heatsink and the drive's thermal model system. Table 6-20 gives the sound pressure level at 1 m produced by the drive for the cooling fan running at the maximum and middle speeds.

To reduce noise emission the drive cooling fan can be set to run at middle speed (Pr **06.045** = -7 or 7) where this is the case, an output current derating may need to be applied. Derating information is provided in Table 6-6 and Table 6-10.

Table 6-20 Acoustic noise data

Cooling Fan control (Pr 06.045)	Acoustic noise dB(A)		
	Frame 1	Frame 2	Frame 3
1	40.3	38.6	40.5
2	43.4	42.7	46.6
3, 4, 5	47.3	46.5	49.6
6, 7	49.3	50.3	53.2
8	52.5	52.3	55.8
9	54.2	53.5	58.1
10, 11	55.5	55.7	60.5

6.1.21 Overall dimensions

H Height including surface mounting brackets
W Width
D Projection forward of panel when surface mounted

Table 6-21 Overall drive dimensions

Model	Dimension			
	H	W (without SI option)	W (with SI option)	D
Digitax HD M75X Frame 1	233 mm (9.17 in)	40 mm (1.58 in)	62 mm (2.44 in)*	174 mm (6.85 in)
Digitax HD M75X Frame 2	278 mm (10.95 in)			
Digitax HD M75X Frame 3	328 mm (12.91 in)			
Digitax M75C Capacitor module	233 mm (9.17 in)	40 mm (1.58 in)		174mm (6.85 in)

* Allow for up to +0.5 mm tolerance with each drive.

6.1.22 Weights

Table 6-22 Overall drive weights

Model	kg	lb
Digitax HD M75X Frame 1	1.9	4.2
Digitax HD M75X Frame 2	2.3	5.1
Digitax HD M75X Frame 3	2.5	5.5
Digitax M75C Capacitor module	2	4.4

6.1.23 Input current, fuse and cable size ratings

The input current is affected by the supply voltage and impedance.

Typical input current

The values of typical input current are given to aid calculations for power flow and power loss.

The values of typical input current are stated for a balanced supply.

Maximum continuous input current

The values of maximum continuous input current are given to aid the selection of cables and fuses. These values are stated for the worst case condition with the unusual combination of stiff supply with bad balance.

The value stated for the maximum continuous input current would only be seen in one of the input phases. The current in the other two phases would be significantly lower. The values of maximum input current are stated for a supply with a 2 % negative phase-sequence imbalance and rated at the maximum supply fault current given in Table 6-23.

Table 6-23 Supply fault current used to calculate maximum input currents

Model	Symmetrical fault level (kA)
All	100 kA



Fuses

The AC supply to the drive must be installed with suitable protection against overload and short-circuits.Table 6-24 shows the recommended fuse ratings. Failure to observe this requirement will cause risk of fire.

Table 6-24 AC input fuse ratings and cable sizes

Model	No of input phases	Typical input current (for single axis)	Fuse ratings (for single axis)		Cable size (for single axis)			
					Input		Output	
		A	IEC gG	UL Class CC, J or T*	mm²	AWG	mm²	AWG
01200022	1	3.7	8	15	0.75	14	0.75	24
01200040	1	6.9	12	15	1.5	14	0.75	22
01200065	1	11.4	16	15	2.5	12	0.75	20
02200090	1	17.7	25	25	4.0	10	0.75	16
02200120	1	23	32	30	6.0	10	0.75	16
03200160	1	31.5	32	40	6.0	8	1.5	14
01200022	3	5.8	8	15	0.75	14	0.75	20
01200040	3	7.9	12	15	1.5	14	0.75	18
01200065	3	10.5	16	15	2.5	14	0.75	16
02200090	3	16.7	25	25	4.0	10	1.0	14
02200120	3	20.3	32	30	6.0	10	1.5	12
03200160	3	27.9	32	40	6.0	8	2.5	12
01400015	3	3.1	6	15	0.75	14	0.75	20
01400030	3	4.8	8	15	0.75	14	0.75	20
01400042	3	5.3	8	15	0.75	14	0.75	18
02400060	3	10.1	16	25	2.5	14	0.75	16
02400080	3	12.1	16	25	2.5	12	0.75	14
02400105	3	14.9	20	25	4.0	12	1.5	14
03400135	3	20.8	32	30	6.0	10	2.5	12
03400160	3	22.0	32	30	6.0	10	2.5	12

***** These are fast acting fuses.

NOTE

Ensure cables used suit local wiring regulations.



The nominal cable sizes below are only a guide. The mounting and grouping of cables affects their current-carrying capacity, in some cases smaller cables may be acceptable but in other cases a larger cable is required to avoid excessive temperature or voltage drop. Refer to local wiring regulations for the correct size of cables.

Table 6-25 DC Fuse ratings

Model	DC fuse current rating (A)	Max clearing I^2t allowed for Amperage	DC voltage rating
1200022	8	0.030 kA^2s	415
1200040	15	0.19 kA^2s	415
1200065	20	0.360 kA^2s	415
2200090	25	0.48 kA^2s	415
2200120	35	1.5 kA^2s	415
3200160	40	1.5 kA^2s	415
1400015	8	0.030 kA^2s	830
1400030	12	0.12 kA^2s	830
1400042	15	0.19 kA^2s	830
2400060	20	0.360 kA^2s	830
2400080	30	1.5 kA^2s	830
2400105	35	1.5 kA^2s	830
3400135	40	1.5 kA^2s	830
3400160	40	1.5 kA^2s	830v

Inrush current

The drive will have an inrush current during power-up, the peak inrush is limited to the value shown below:

200 V
Frame 1 7.5 A peak
Frame 2 7.5 A peak
Frame 3 14.9 A peak

400 V
Frame 1 8.1 A peak
Frame 2 8.1 A peak
Frame 3 16.2 A peak

6.1.24 Motor cable size and maximum lengths

Table 6-26 Motor cable size and maximum lengths

Model	Number of input phases	Output cable		All switching frequencies
		mm^2	AWG	
01200022	1	0.75	24	50 m
01200040	1	0.75	22	
01200065	1	0.75	20	
02200090	1	0.75	16	
02200120	1	0.75	16	
03200160	1	1.5	14	
01200022	3	0.75	20	
01200040	3	0.75	18	
01200065	3	0.75	16	
02200090	3	1.0	14	
02200120	3	1.5	12	
03200160	3	2.5	12	
01400015	3	0.75	20	
01400030	3	0.75	20	
01400042	3	0.75	18	
02400060	3	0.75	16	
02400080	3	0.75	14	
02400105	3	1.5	14	
03400135	3	2.5	12	
03400160	3	2.5	12	

6.1.25 External brake resistor values

Table 6-27 Minimum resistance values and peak power rating for the braking resistor at 40 °C

Model	Minimum resistance* (Pr 10.061)	Peak power rating	Continuous power rating (Maximum Pr 10.030 setting)	Maximum braking resistor thermal time constant (Pr 10.031)
	Ω	kW	kW	s
200 V				
01200022	25	6	2	2
01200040	25	6	2	2
01200065	25	6	2	2
02200090	13	11.1	3.7	2
02200120	13	11.1	3.7	2
03200160	10	15	5	2
400 V				
01400015	106	5.7	1.9	2
01400030	106	5.7	1.9	2
01400042	106	5.7	1.9	2
02400060	36	16.8	5.6	2
02400080	36	16.8	5.6	2
02400105	36	16.8	5.6	2
03400135	26	22.8	7.6	2
03400160	26	22.8	7.6	2

* Resistor tolerance: ±10 %.

6.1.26 Terminal size and torque settings

Table 6-28 Drive control terminal type

Model	Connection type
All	Spring terminals

Table 6-29 Drive control terminal data

Terminals	Max cable size	Min cable size	Recommended torque*
Control terminals	1.5mm² (16 AWG)	0.2 mm² (24 AWG)	
+24 V supply connector	6 mm² (10 AWG)	0.5 mm² (20 AWG)	0.5 N m (4.4 lb in)

* Torque tolerance = 10 %.

Table 6-30 Drive power terminal data

Model size	Terminal block description	Max cable size	Min cable size	Recommended torque*
All	AC power terminal connector	6 mm² (8 AWG)	0.5 mm² (20 AWG)	0.7 N m (6.2 lb in)
	Motor power terminal connector	4 mm² (12 AWG)	0.5 mm² (20 AWG)	0.5 N m (4.4 lb in)
	Brake terminal connector	6 mm² (8 AWG)	0.5 mm² (20 AWG)	0.7 N m (6.2 lb in)
	DC busbar			2.0 N m (17.7 lb in)
	Ground busbar			2.0 N m (17.7 lb in)
	Internal EMC filter screw			0.8 N m (7.1 lb in)
	Compact brake resistor mounting screw			0.8 N m (7.1 lb in)
	Compact brake resistor thermistor screw			0.3 N m (2.7 lb in)

* Torque tolerance = 10 %

Table 6-31 External EMC filter terminal data

Part number	Power connections		Ground connections	
	Max cable size	Recommended torque	Ground stud size	Max torque
4200-3503	16 mm² (AWG 6)	1.5 to 1.8 N m (13.3 to 15.9 lb in)	M6	4 N m (35.4 lb in)
4200-5033	16 mm² (AWG 6)	1.5 to 1.8 N m (13.3 to 15.9 lb in)	M6	4 N m (35.4 lb in)
4200-6034	35 mm² (AWG 2)	4 to 4.5 N m (35.4 to 39.8 lb in)	M8	9 N m (79.7 lb in)
4200-6001	6 mm² (AWG 10)	0.8 N m max		
4200-6002	6 mm² (AWG 10)	0.8 N m max		
4200-1644	10 mm² (AWG 8)	1.5 to 1.8 N m (13.3 to 15.9 lb in)	M5	2.2 N m (19.5 lb in)
4200-8744	10 mm² (AWG 8)	1.5 to 1.8 N m (13.3 to 15.9 lb in)	M5	2.2 N m (19.5 lb in)
4200-3233	16 mm² (AWG 6)	1.5 to 1.8 N m (13.3 to 15.9 lb in)	M6	4 N m (35.4 lb in)
4200-5833	16 mm² (AWG 6)	1.5 to 1.8 N m (13.3 to 15.9 lb in)	M5	2.2 N m (19.5 lb in)
4200-5534	35 mm² (AWG 2)	4 to 4.5 N m (35.4 to 39.8 lb in)	M6	4 N m (35.4 lb in)
4200-7534	35 mm² (AWG 2)	4 to 4.5 N m (35.4 to 39.8 lb in)	M6	4 N m (35.4 lb in)
4200-0035	50 mm² (AWG 1/0)	7 to 8 N m (62 to 70.8 lb in)	M10	15 to 17 N m (132.9 to 150.6 lb in)

6.1.27 Electromagnetic compatibility (EMC)

This is a summary of the EMC performance of the drive. For full details, refer to the *EMC Data Sheet* which can be obtained from the supplier of the drive.

Table 6-32 Immunity compliance

Standard	Type of immunity	Test specification	Application	Level
IEC 61000-4-2	Electrostatic discharge	6 kV contact discharge 8 kV air discharge	Module enclosure	Level 3 (industrial)
IEC 61000-4-3	Radio frequency radiated field	Prior to modulation: 10 V/m 80 - 1000 MHz 3 V/m 1.4 - 2.0 GHz 1 V/m 2.0 - 2.7 GHz 80 % AM (1 kHz) modulation Safe Torque Off (STO) tested to: 20 V/m 80 – 1000 MHz 6 V/m 1.4 - 2.0 GHz 3 V/m 2.0 - 2.7 GHz	Module enclosure	Level 3 (industrial)
IEC 61000-4-4	Fast transient burst	5/50 ns 2 kV transient at 5 kHz/100 kHz repetition frequency via coupling clamp	Control lines	Level 4 (industrial harsh)
		5/50 ns, 2 kV transient at 5 kHz/100 kHz repetition frequency by direct injection	Power lines	Level 3 (industrial)
IEC 61000-4-5	Surges	Common mode 4 kV 1.2/50 µs wave shape	AC supply lines: line to earth	Level 4
		Differential mode 2 kV	AC supply lines: line to line	Level 3
		Common mode 1 kV	Control lines & DC supply lines	(Notes:1 & 2)
IEC 61000-4-6	Conducted radio frequency	10 V prior to modulation 0.15 - 80 MHz 80 % AM (1 kHz) modulation	Control and power lines	Level 3 (industrial)
IEC 61000-4-11	Voltage dips, short interruptions & variations	All durations	AC supply lines	
			DC supply lines	
IEC 61000-4-8	Power frequency magnetic field	1700 A/m RMS. 2400 A/m peak (2.1 mT RMS 3 mT peak) continuous at 50 Hz	Module enclosure	Exceeds level 5
IEC 61000-6-1	Generic immunity standard for the residential, commercial and light - industrial environment			Complies
IEC 61000-6-2	Generic immunity standard for the industrial environment			Complies
IEC 61800-3	Product standard for adjustable speed power drive systems (immunity requirements)		Meets immunity requirements for first and second environments	

NOTE

1. Applies to ports where connections may exceed 30 m length. Special provisions may be required in some cases - refer to the Digitax HD M75X EMC data sheet which can be obtained from supplier of the drive.

2. Not all parts can be tested using the IEC 61000-4-5 standard. Where cabling between external power supplies and the drives are < 10 m the power supply itself should provide sufficient surge protection.

Emission

The drive contains an in-built filter for basic emission control. An additional optional external filter provides further reduction of emission. The requirements of the following standards are met, depending on the motor cable length and switching frequency. For an explanation of EMC equipment categories C1 to C4, refer to section 4.10.6.

Table 6-33 Frame 1 three phase emission compliance (200 V drives)

Switching frequency	EMC filter	Frame 1					
		3 m	5 m	10 m	15 m	20 m	50 m
3 kHz	Internal	C3				C4	
	Internal and external	C1					
8 kHz	Internal	C3		C4			
	Internal and external	C1					
16 kHz	Internal	C4					
	Internal and external	C1					

Table 6-34 Frame 2 three phase emission compliance (200 V drives)

Switching frequency	EMC filter	Frame 2					
		3 m	5 m	10 m	15 m	20 m	50 m
3 kHz	Internal	C3					C4
	Internal and external	C1					
8 kHz	Internal	C3			C4		
	Internal and external	C1					
16 kHz	Internal	C3	C4				
	Internal and external	C2					

Table 6-35 Frame 3 three phase emission compliance (200 V drives)

Switching frequency	EMC filter	Frame 3					
		3 m	5 m	10 m	15 m	20 m	50 m
3 kHz	Internal	C3					C4
	Internal and external	C1					
8 kHz	Internal	C3		C4			
	Internal and external	C1					
16 kHz	Internal	C3	C4				
	Internal and external	C1					

Table 6-36 Frame 1 three phase emission compliance (400 V drives)

Switching frequency	EMC filter	Frame 1					
		3 m	5 m	10 m	15 m	20 m	50 m
3 kHz	Internal	C3			C4		
	Internal and external	C1					
8 kHz	Internal	C3	C4				
	Internal and external	C1					
16 kHz	Internal	C4					
	Internal and external	C1					C2

Table 6-37 Frame 2 three phase emission compliance (400 V drives)

Switching frequency	EMC filter	Frame 2					
		3 m	5 m	10 m	15 m	20 m	50 m
3 kHz	Internal	C3			C4		
	Internal and external	C1					
8 kHz	Internal	C3	C4				
	Internal and external	C1					
16 kHz	Internal	C4					
	Internal and external	C1					

Table 6-38 Frame 3 three phase emission compliance (400 V drives)

Switching frequency	EMC filter	Frame 3					
		3 m	5 m	10 m	15 m	20 m	50 m
3 kHz	Internal	C3			C4		
	Internal and external	C1					
8 kHz	Internal	C3		C4			
	Internal and external	C1					
16 kHz	Internal	C4					
	Internal and external	C1					C2

Table 6-39 Frame 1 single phase emission compliance (200 V drives)

Switching frequency	EMC filter	Frame 1					
		3 m	5 m	10 m	15 m	20 m	50 m
3 kHz	Internal	C3				C4	
	Internal and external	C1					C2
8 kHz	Internal	C3		C4			
	Internal and external	C1	C2				
16 kHz	Internal	C4					
	Internal and external	C1	C2				C3

Table 6-40 Frame 2 single phase emission compliance (200 V drives)

Switching frequency	EMC filter	Frame 1					
		3 m	5 m	10 m	15 m	20 m	50 m
3 kHz	Internal	C3					C4
	Internal and external	C1				C2	
8 kHz	Internal	C3			C4		
	Internal and external	C2					
16 kHz	Internal	C3	C4				
	Internal and external	C2					C3

Table 6-41 Frame 3 single phase emission compliance (400 V drives)

Switching frequency	EMC filter	Frame 1					
		3 m	5 m	10 m	15 m	20 m	50 m
3 kHz	Internal	C3					C4
	Internal and external	C1		C2			
8 kHz	Internal	C3		C4			
	Internal and external	C2				C3	
16 kHz	Internal	C3	C4				
	Internal and external	C2		C3			

Power drive systems are categorized C1 to C4:

Category	Definition	Corresponding code used
C1	Intended for use in the first or second environments	R
C2	Not a plug-in or movable device, and intended for use in the first environment only when installed by a professional, or in the second environment	I
C3	Intended for use in the second environment, not the first environment	E2U
C4	Rated at over 1000 V or over 400 A, intended for use in complex systems in the second environment	E2R

Note that category 4 is more restrictive than E2R, since the rated current of the PDS must exceed 400 A or the supply voltage exceed 1000 V, for the complete PDS.

6.1.28 Optional External EMC filters

Table 6-42 Drive and EMC filter cross reference

Model	Number of phases	Part number
200 V		
01200022	1	4200-3503
01200040	1	
01200065	1	
02200090	1	4200-5033
02200120	1	
03200160	1	4200-6034
01200022	3	4200-8744
01200040	3	4200-6002
01200065	3	4200-6001
02200090	3	4200-5833
02200120	3	4200-5833
03200160	3	4200-5833
400 V		
01400015 to 01400042	3	4200-8744
02400060 to 02400105	3	4200-1644
03400135 to 03400160	3	4200-5833

6.1.29 EMC filter ratings

Table 6-43 Optional external EMC filter details

Part number	Number of phases	Maximum continuous current		Maximum voltage rating		Power losses at rated current	IP rating	Weight		Operational leakage current	Worst case leakage current
		@40 °C (104 °F)	@50 °C (122 °F)	IEC	UL						
		A	A	V	V			kg	lb	mA	mA
4200-3503	1	30	27.3	250	250	6.1	20	0.7	1.5	5.4	10.8
4200-5033	1	55	50.1	250	250	9.9	20	1.2	2.6	11	22
4200-6034	1	65.7	60	250	250	5.5	20	1.8	4.0	3.4	6.8
4200-8744	3	7.7	7	480	480	3.8	20	0.5	1.1	33	178.2
4200-6002	3	11	10	480	480	10	20	1.2	2.64	16	90
4200-6001	3	17	15.5	250	250	13	20	1.2	2.64	8	50
4200-1644	3	17.5	16	480	480	6.1	20	0.8	1.76	33	178.2
4200-5833	3	32.9	30	480	480	11.8	20	1.2	2.64	33	178.2
4200-3233	3	46	42	480	480	15.7	20	1.4	3.1	33	178.2
4200-5534	3	60.2	55	480	480	25.9	20	2.0	4.4	33	178.2
4200-7534	3	82.2	75	480	480	32.2	20	2.7	6.0	33	178.2
4200-0035	3	109.5	100	480	480	34.5	20	4.3	9.5	33	178.2

6.1.30 Overall EMC filter dimensions

Table 6-44 Optional external EMC filter dimensions

Part number	Dimension						Weight	
	H		W		D			
	mm	inch	mm	inch	mm	inch	kg	lb
4200-3503	149.5	5.89	105	4.13	57.6	2.27	0.7	1.5
4200-5033	230	9.06	115	4.53	60	2.36	1.2	2.6
4200-6304	243	9.57	115	4.53	100	3.94	1.8	4.0
4200-6001	359	14.13	61	2.40	29	1.14	1.2	2.64
4200-6002	359	14.13	61	2.40	29	1.14	1.2	2.64
4200-1644	264	10.39	70	2.76	45	1.77	0.8	1.76
4200-8744	204	8.03	70	2.76	40	1.58	0.5	1.10
4200-3233	330	13.0	85	3.35	50	1.97	1.4	3.08
4200-5833	290	11.42	85	3.35	50	1.97	1.2	2.64
4200-5534	298	11.73	90	3.54	85	3.35	2.0	4.40
4200-7534	318	12.52	135	5.32	80	3.15	2.7	5.94
4200-0035	330	13.00	150	5.91	90	3.54	4.3	9.46

7 UL information

UL File Numbers and guide card information

The Digitax HD M75X drives are cUL Listed in accordance with the relevant standards shown below.

United States Standard: UL 61800-5-1

Canadian National Standard: C22.2 No. 274.

Category Control Code: NMMS / 7

UL File no: E171230.

Applicant and Listee:

Nidec Control Techniques Ltd
The Gro
Pool Road
Newtown
Powys
SY16 3BE
UK.

Electrical Installation

Electrical installation must conform to the US National Electrical Code, the Canadian Electrical Code and any additional local codes, as required.

Electrical ratings

Electrical ratings are shown in section 2 of this manual.

Enclosure rating

All drives are Open Type. An enclosure must be provided by the installer.

Operating temperature

The drives are suitable for use up to 40 °C surrounding air temperature. Operation up to 55 °C is permitted with de-rated output. Refer to section 6 in this manual.

Cable sizes

The recommended cable sizes and fuse ratings are shown in section 4 of this manual.

Field Wiring Input & Output Power Conductors shall not be smaller than 14 AWG.

Field Wiring Control Conductors shall not be smaller than 18AWG.

Only a single conductor is allowed in each field wiring terminal when connected in group installation arrangement or equivalent wording.

Multiple wiring arrangements

The drives can operate from either a single phase or a three-phase AC supply.

Additionally, the drives can operate from a DC supply with a range from 24 Vdc up to the maximum rated DC supply voltage.

It is possible for the drive to go from operating on a normal line power supply voltage to operating on a much lower supply voltage without interruption.

The wiring arrangements are shown in section 4 of this manual.

External 24 V supply

An external 24 V DC supply is required to power the low voltage circuits within the drive.

The low voltage circuits are isolated from the live circuits.

The 24 V supply must be protected by a supplemental fuse.

Refer to section 4.4 in this manual.

Terminals

The Earth (Ground) connections and the DC power connections must use UL Listed ring terminals sized according to the field wiring. Only one cable is permitted to be connected to each field wiring terminal.

Branch circuit protection and short circuit current rating (SCCR)

Non-group installation up to 5 kA

These products can be connected to a circuit capable of delivering not more than 5 kA RMS symmetrical amperes, 480 Volts maximum when protected by a 40 A Listed fuse, selected from the UL248 range of fuses, for example Class J, Class T or Class CC. The fuse current rating must not exceed 40 A.

Non-group installation up to 100 kA

These products can be connected to a circuit capable of delivering not more than 100kA RMS symmetrical amperes, when protected by a 63 A Recognised fuse. Fuses can be any type chosen from Table 7-1 below. The fuse current rating must not exceed 63 A.

Table 7-1 Recognised (JFHR2) semiconductor fuses

Fuse Manufacturer	Fuse Series	Manufacturers Part No.	Max clearing I^2t ($A^2s \times 10^3$)	Package style	UL File
Bussman	FWP	FWP-63A22F	4.00	22x58	E91958
Bussmann	FWP	FWP-63A22FI	3.08	22x58	E91958
Mersen	A70QS	A70QS63-22F	1.85	22x58	E76491
Mersen	FR22	FR22GC69V63	2.46	22x58	E76491
Mersen	FR22	FR22GC69V63T	2.46	22x58	E76491
Mersen	A070URD	A070URD30**0063	1.20	URD30	E76491
SIBA	URDC	20 292 20.63	0.69	NH 000 DIN 80	E180276

Group installation up to 100 kA

These products can be connected as a Modular Drive Systems with a Common DC bus as shown in section 5 of this manual.

The Converter section of a Modular Drive System can be connected to a circuit capable of delivering not more than 100kA RMS symmetrical amperes, when protected by a 63 A Recognised fuse in series with a 40 A Listed fuse. The Recognised fuses can be any type chosen from Table 7-1.

Overvoltage category

The Over Voltage Category is OVC III.

OVC III applies to equipment permanently connected in fixed installations (Downstream of and including the main distribution board).

Pollution degree

Drives are designed for operation in a pollution degree 2 environment or better (dry, non-conductive pollution only).

Plenum rating

The drives are not suitable for installation in a compartment (duct) handing conditioned air.

Solid state short circuit protection

The drives include integral solid-state short circuit protection. However, this does not provide branch circuit protection. Branch circuit protection must be provided in accordance with the National Electrical Code and any additional local codes.

Motor overload protection

The drives incorporate overload protection for the motor. An external motor overload relay is not required.

The protection level is adjustable. The method of adjustment is described in section 4 of this manual.

Thermal memory retention

The drives incorporate internal overload protection for the motor load that does not require the use of an external or remote overload protection device.

There is also provision for the use of a motor thermistor to prevent over-heating of the motor, e.g. due to loss of cooling.

Rear Vent Kit

The Rear Vent Kit cooling system is UL approved. Refer to section 3.12 in this manual.

Index

Symbols

+24V user output 86

Numerics

0V (Common connection for all external devices) 85

A

Air-flow in a ventilated enclosure 39

B

Braking 67

C

Cautions 6

D

DC bus voltage 67
Deceleration 67
Digital Input 4 86
Digital Input 5 86
Digital Output 2 86
Drive enable 85

E

EMC - Variations in the wiring 82
EMC filter torque settings (external) 49
Enclosure sizing 38
Encoder types 87

F

Fixed V/F mode 12

G

Ground leakage 70
Grounding bracket 72, 73, 74

I

Input inductor current ratings 59
Internal EMC filter 73
Isolator switch 84

M

Mechanical Installation 19
Motor cable - interruptions 83
Motor isolator / disconnector-switch 83
Motor operation 66

N

Notes 6

O

Open loop mode 11
Open loop vector mode 12
Operating modes 11
Output contactor 66

P

Product information 8

Q

Quadratic V/F mode 12

R

Residual current device (RCD) 70
RFC-A mode 12

S

Safe Torque Off/drive enable 85
Safety Information 6
Sealed enclosure - sizing 38
Surge suppression for analog and bipolar inputs and outputs 84
Surge suppression for digital and unipolar inputs and outputs 84

T

Terminal block in the enclosure 83
Thermal protection circuit for the braking resistor 69

W

Warnings 6



0478-0395-06